Transmitter SOLUTIONS®

HIVE™

Pulse™

CONTROLLER & RECEIVER

# USER AND INSTALLATION MANUAL

Software version 1.0.18

# TABLE OF CONTENTS

INTRODUCTION ..... 2
WARNINGS ..... 2
TECHNICAL SPECIFICATIONS ..... 2
CONNECTION LAYOUT ..... 3
ELECTRONIC CONNECTIONS ..... 4
RS-485 LINE TERMINATION ..... 4

## PROGRAMMING GUIDE

STEPS 1-19 ..... 5 - 22

## STAND ALONE GUIDE

PUSH BUTTON AND LCD DISPLAY ..... 23
MENU ..... 24
CONFIG MENU ..... 24
MENU INFO ..... 25
MENU ADD ..... 25
MENU DELETE ..... 26
MENU MODITY USER ..... 27
MENU COPY MEMORY ..... 28
MENU COPY MEMORY: COPY ON PRINTER ..... 29
MENU CONFIG ..... 31
MENU CONFIG: COM PARAMETERS ..... 32
TIME ZONES ..... 33
OWNER MENU ..... 34

# NOTICE

THE PULSE REQUIRES A SHIELDED CABLE. WE RECOMMEND THE BELDEN 9534 OR EQUIVALENT.

THE PULSE ALSO REQUIRES A 16V AC/DC POWER SUPPLY.

## INTRODUCTION

PULSE is an innovative multiuser receiver with double technology ID (RF and Wiegand). It has been designed to manage premises with common entries such as parking, garage, condominiums, and gated communities making use of a remote control or a passive tag card.

## WARNINGS

This manual is intended for professional trained personnel. Installation and connections must be in accordance with Good Working methods and in compliance with the current regulations. Failure to do so may be hazardous. Before the receiver is connected, make sure that the plate details correspond to those of the power mains and that there is a differential circuit-breaker and an adequate protection against over currents on the supply side of the system. Fit an omnipolar disconnection switch with contact opening gap of at least 3mm.

## TECHNICAL SPECIFICATIONS

- Radio receiver 433.82MHz in AM/ASK
- Hopping code security system
- 2 inputs for 26-Wiegand readers
- 4x24VA output relays (2 outputs (C-NO) + 2 outputs (C-NO-NC)
- 2 inputs for exit buttons (C-NA)
- Input USB devices for PC connection
- Slot for GSM modem card [9600 Baud] with external antenna or PSTN modem card with RJ45 connector
- I/F RS-485 for network connection
- Up to 64 devices in multidrop
- Data memory redundant for events log event and users data base [2X512K]
- Input for transmitters reprogramming probe with RJ11 connector
- Connector for memory expansion [6x 512K]
- Connector for old-style backup memory
- Connector for backup memory [4x 512K]
- Connector for firmware update special card
- Real time clock with lithium backup battery CR2032
- Power supply 230V AC/DC
- Input 12V DC for 12V /7Ah backup battery with embedded battery charger
- Auxiliary  output 5V DC – 150 mA

## CONNECTION LAYOUT

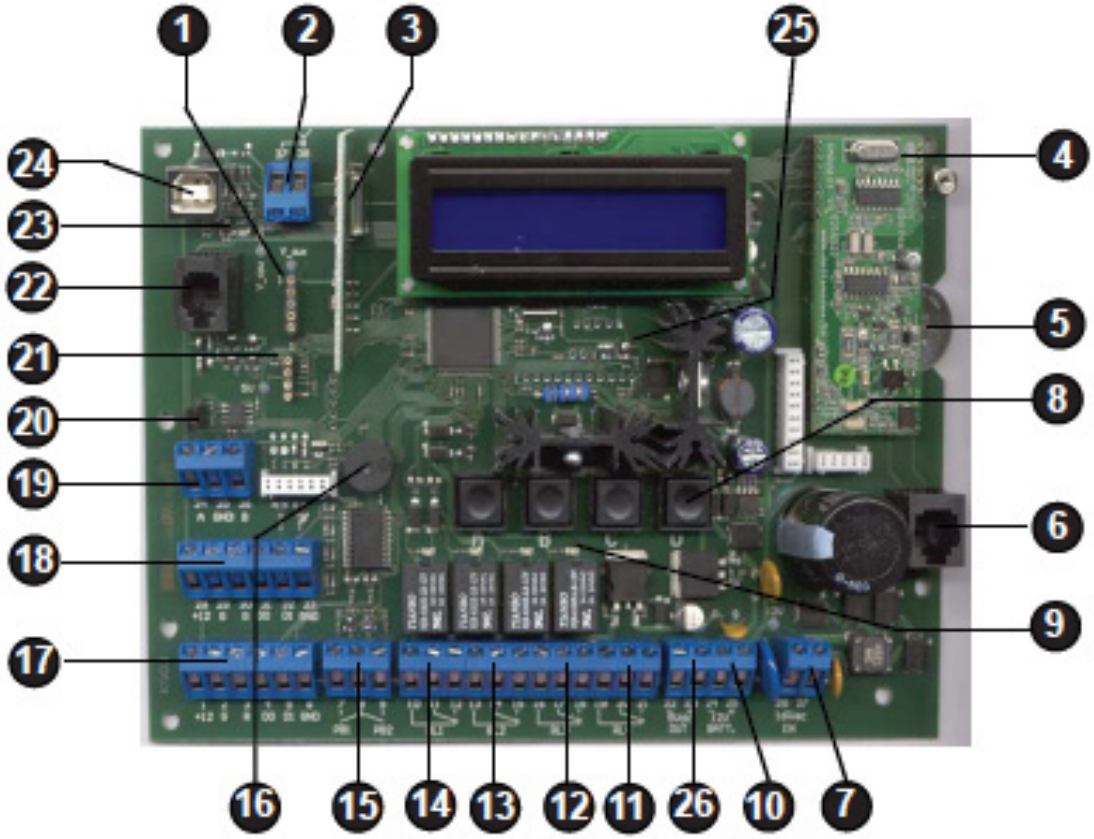


1. Backup memory connector
2. Input for 433MHz antenna
3. RF receiver card
4. PSTN module (optional)
5. CR2032-3V backup battery
6. RJ45 connector for telephone line
7. Input for power supply
8. 4 programming buttons (ABCD)
9. Relay activation LED
10. Input for 12V backup battery
11. Output C-NO-NC relay RL4
12. Output C-NO-NC relay RL3
13. Output C-NO-NC relay RL2
14. Output C-NO-NC relay RL1
15. Input NO-C-NO for exit buttons PB1, PB2
16. Buzzer
17. Input Wiegand 2
18. Input Wiegand 1
19. I/F RS-485
20. Jumper for 485 termination
21. Backup memory connector (old type)
22. Not used
23. USB signaling LED
24. USB Device connector
25. Power LED
26. Auxiliary output 5V DC-150 mA

## ELECTRONIC CONNECTIONS

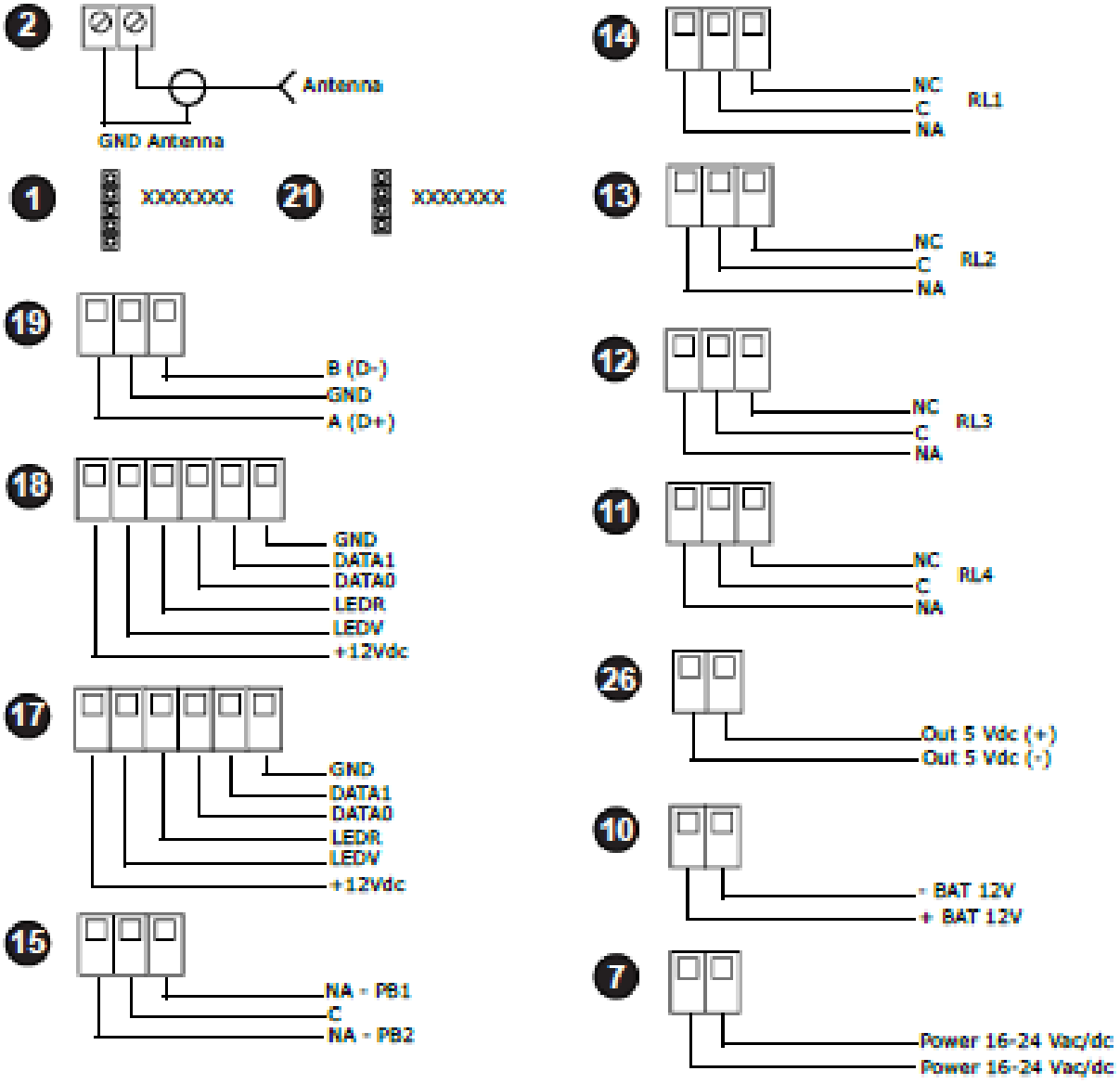


## RS-485 LINE TERMINATION

In a RS-485 network, set the termination jumper CLOSED in the Pulse at the end of the line and OPEN in the pulse in between Pulses.

PULSE END OF LINE:
**JUMPER CLOSED**

PULSE INTERMEDIATE:
**JUMPER OPEN**

# PROGRAMMING GUIDE

## REQUIRED WIRE FOR WIEGAND

Transmitter Solutions requires a shielded muli-conductor cable for the Pulse to have the best range for its Wiegand readers.  Belden 9931 is highly recommended.

Step by Step Instructions on Programming for Your Card/FOB Reader and Transmitter Remotes

**STEP 1:** Define number of users

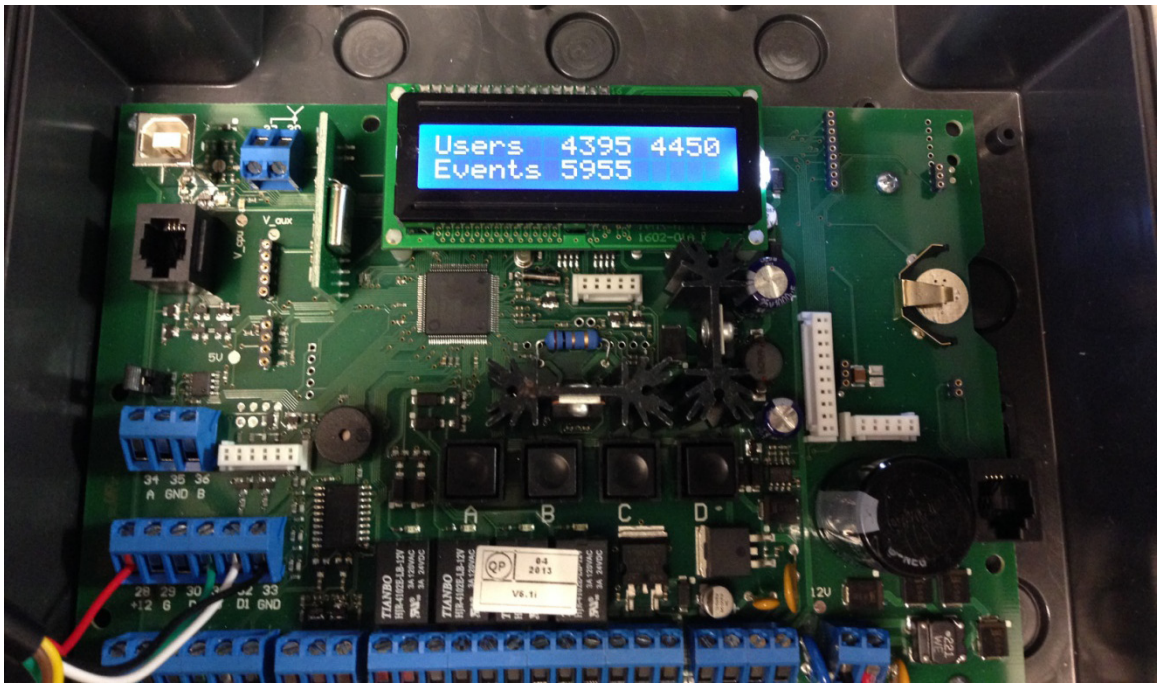


When powering your Pulse for the first time, you will have the option of setting the number of users. The pulse contains a limited amount of memory. We recommend setting the number of users between 4395 – 4450.

a. Button A increases the digit highlighted

b. Button B continues to the next digit

**STEP 2:** Confirm number of users

Continue by pressing the B button and press the B button again if you are sure of your choices. Otherwise press the A button to return to the previous step.

**STEP 3:** Plug in USB

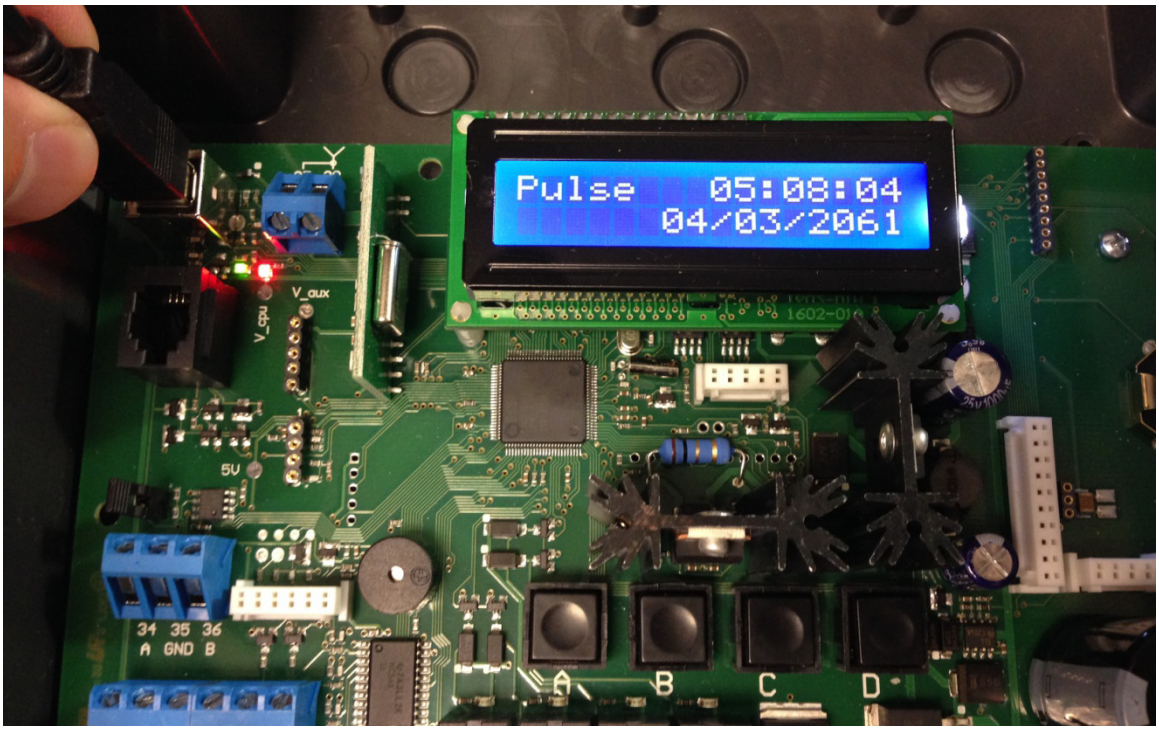


The pulse will continue its initial setup and will stop at the Pulse's main screen. From here we will move on to the Pulse's software: Site Manager.

a. At this point, please connect your Pulse to your computer via USB.

## STEP 4: Create new site

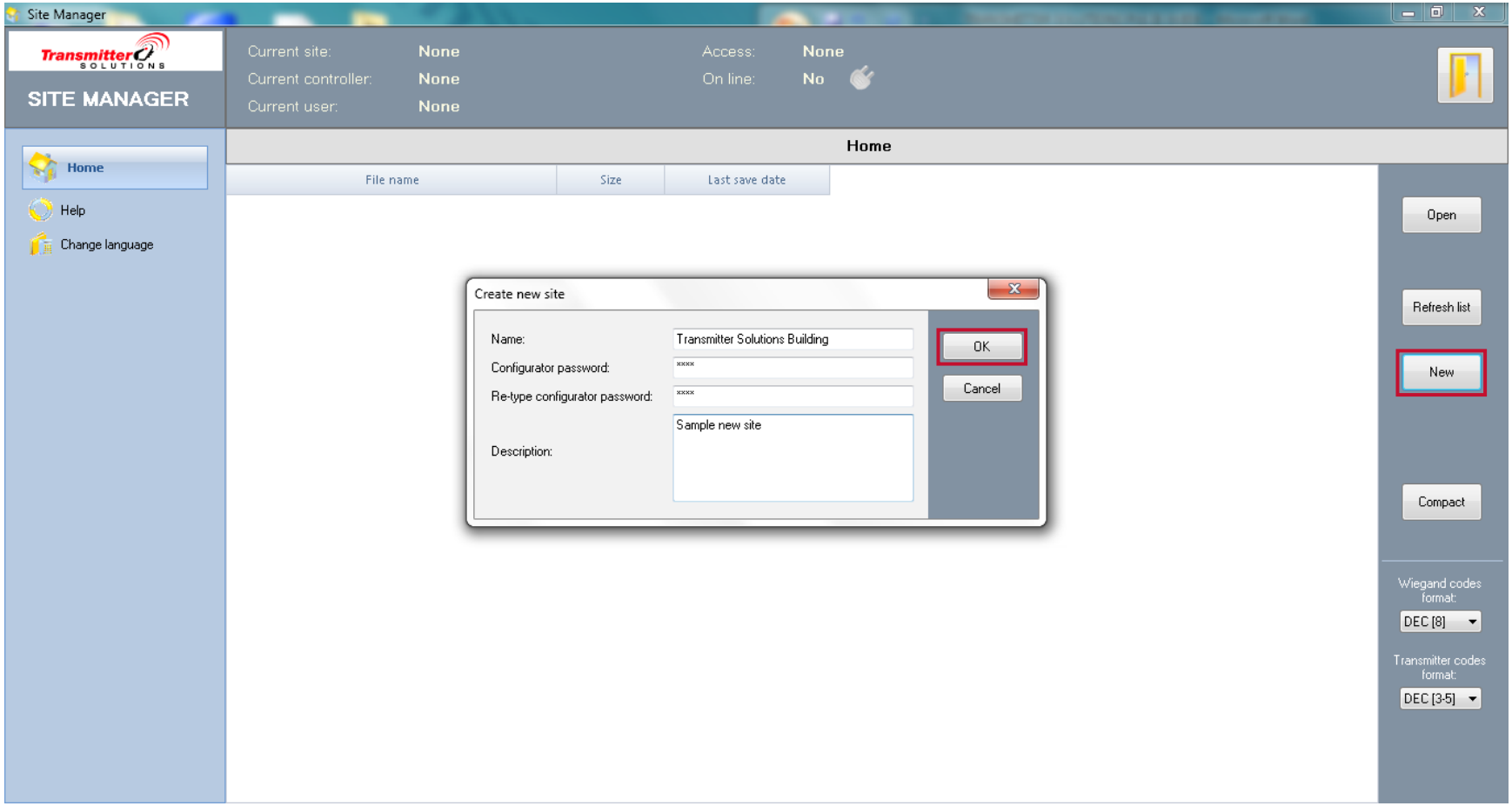


- After installing the Site Manager software on your computer, Press “New” and create a new site.
  - You can find the Pulse software at www.transmittersolutions.com/receivers/software/PulseSiteManager.zip

**STEP 5:** Controller profile and connection data

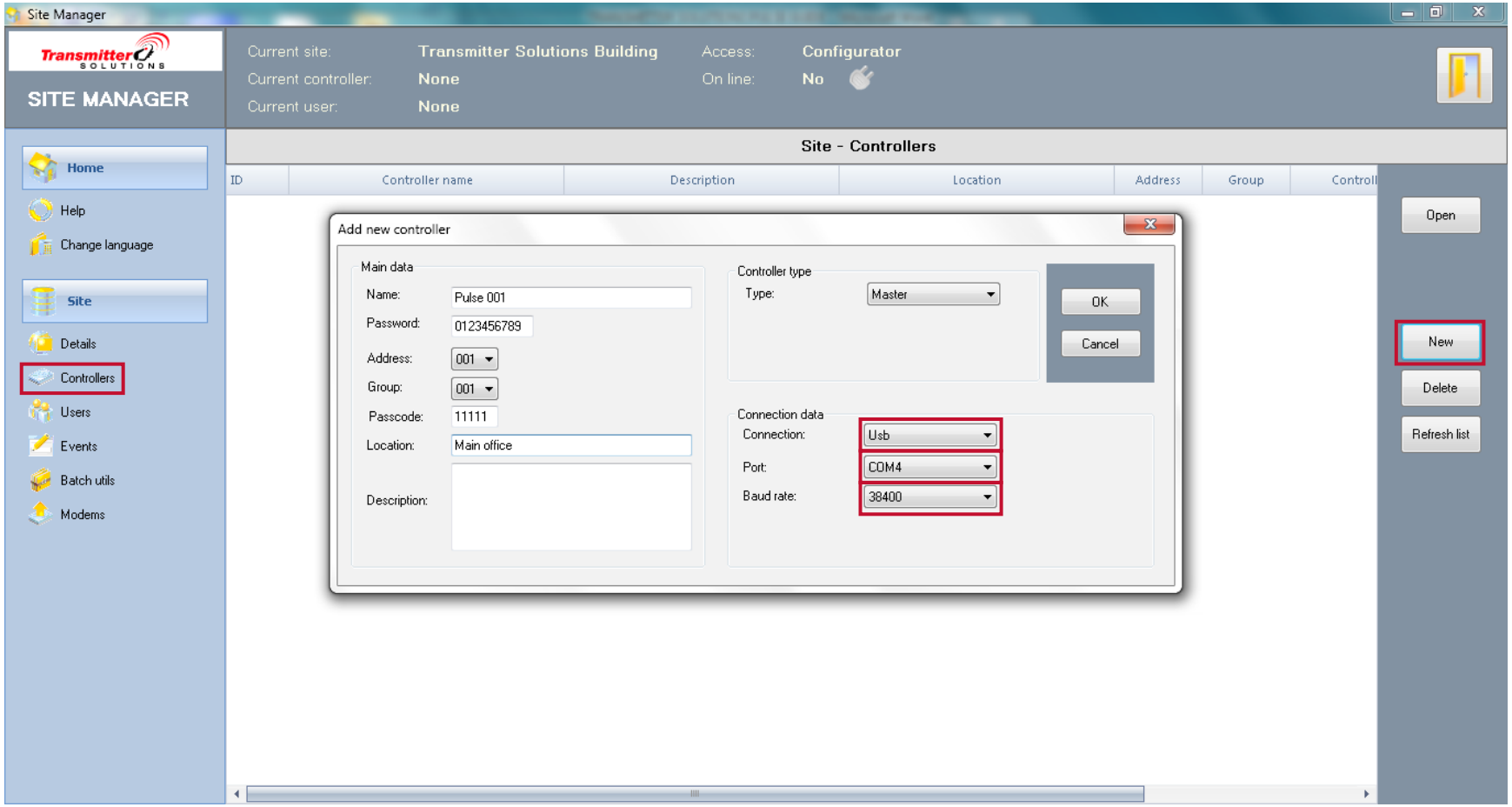


Click on the “Controller” tab on the left column and then click on “New”. Create a profile for your new controller. Please note under “Connection Data” that we switched the connection to “USB”. In this example, our port is “COM4”, which is the port to which the Pulse is connected. Your Port may be different than our port. The default Baud rate for the pulse is 38400. Please use this baud rate. Press OK to continue.

**STEP 6:** Reopen the controller profile

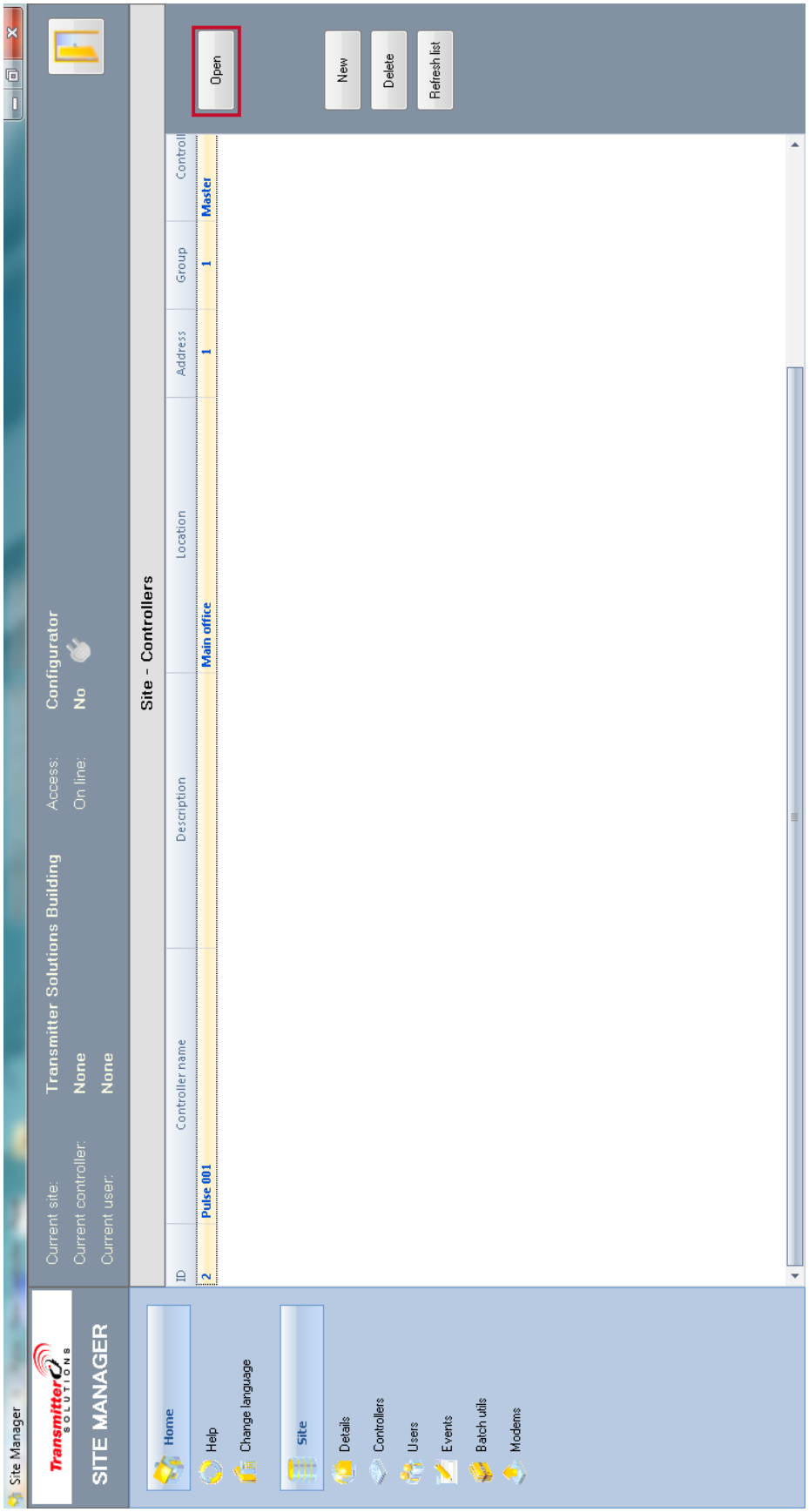


Please open your newly created controller profile by double clicking on your controller name or highlighting your controller name and pressing the "Open" button on the right column.

**STEP 7:** Set relays

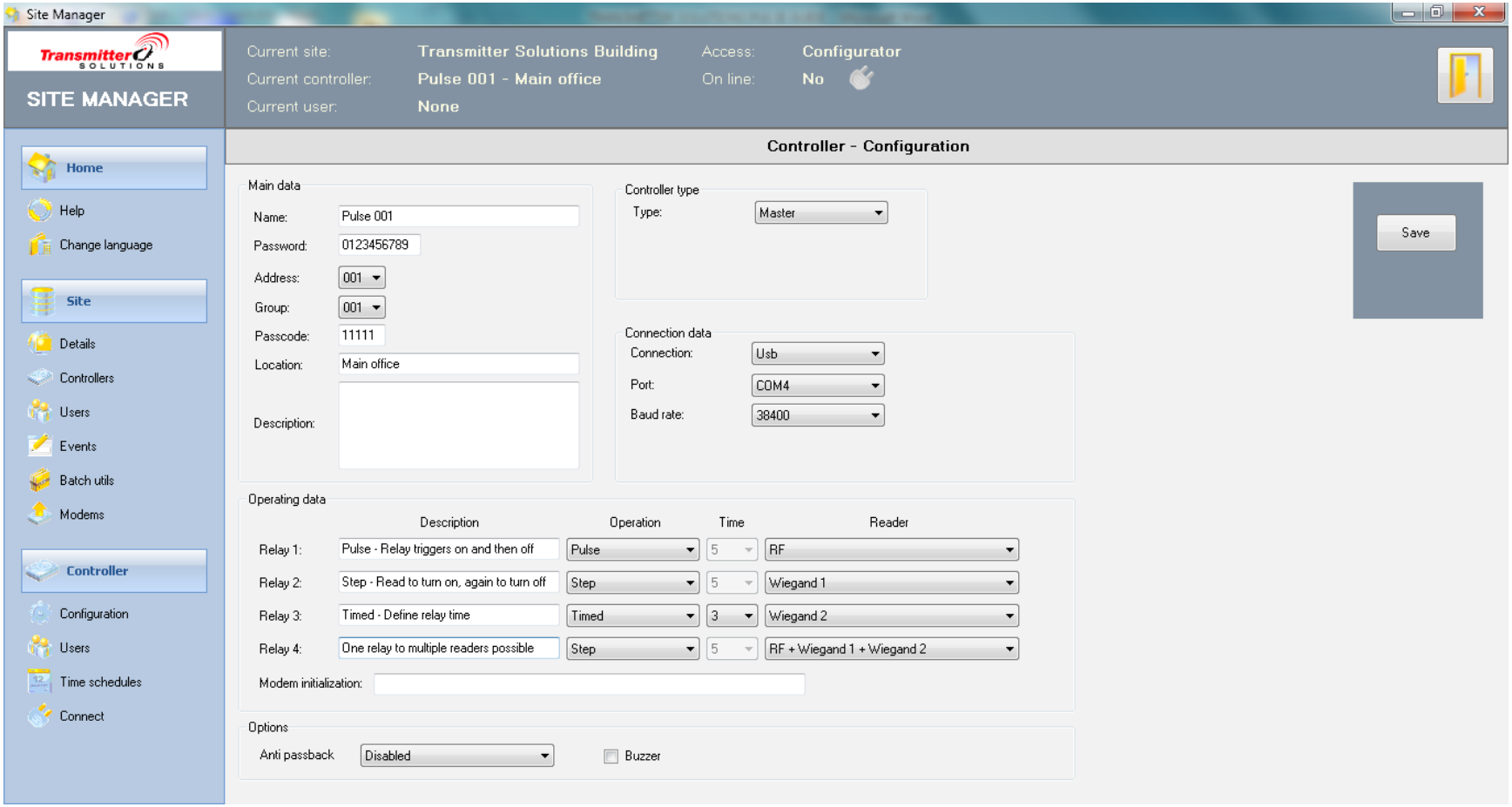


Here, we will set the options for our relays. Please note that each relay can be assigned to one or multiple readers. If you are using transmitters, set your readers to RF. If using cards/FOBs, set your reader to the related Wiegand location. More details about transmitter and reader programming below. Also note that each relay can be assigned a different type of operation based on preference. Below is a description of the relay operation options. Click “Save” when finished.

c. Pulse – Relay clicks on and off

d. Step – Reading a card/transmitter will keep the relay on. Reading again will turn the relay off

e. Timed – You can define the amount of seconds the relay will stay on before triggering off

**STEP 8:** Create user profile example

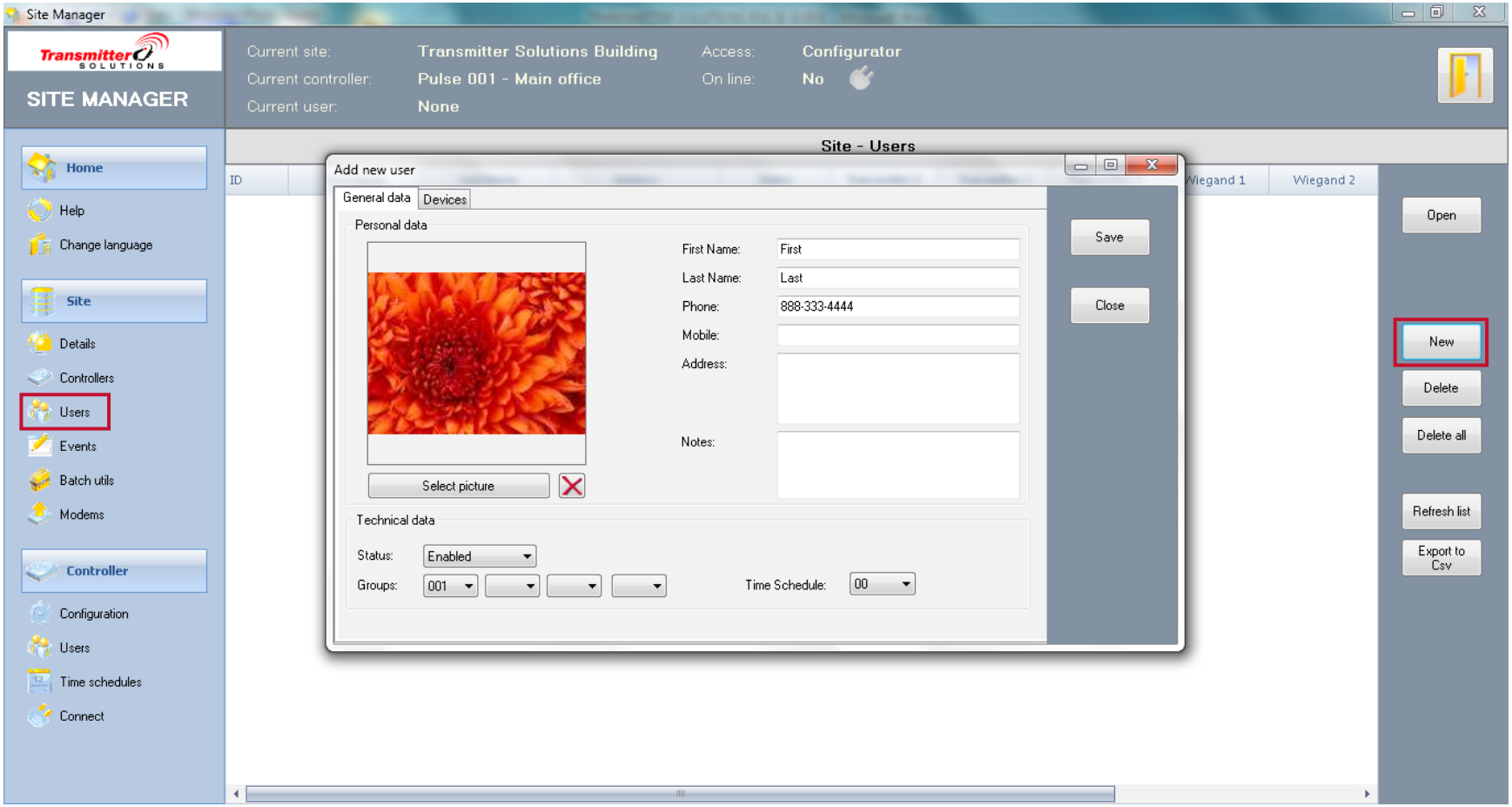


On the left column, click on the “Users” tab and create a new user by clicking on the “New” button on the right. Here, we can create a profile of our user. You may assign groups and time schedules for each individual user.

**STEP 9:** Finding transmitter FC and SN

If you are programming transmitters, We need to find out the facitlity code (FC) and the serial number (SN) of your transmitter, which is usually located on the back of your transmitter. If you do not know the FC and SN of your transmitter, take your 433.92 frequency transmitter and press any button. The Pulse will be able to pick up the transmission with the FC and SN. Here, this particular remote has a FC: 001 SN:53897. The button pressed is button A.

**STEP 10:** Set FC and SN to user

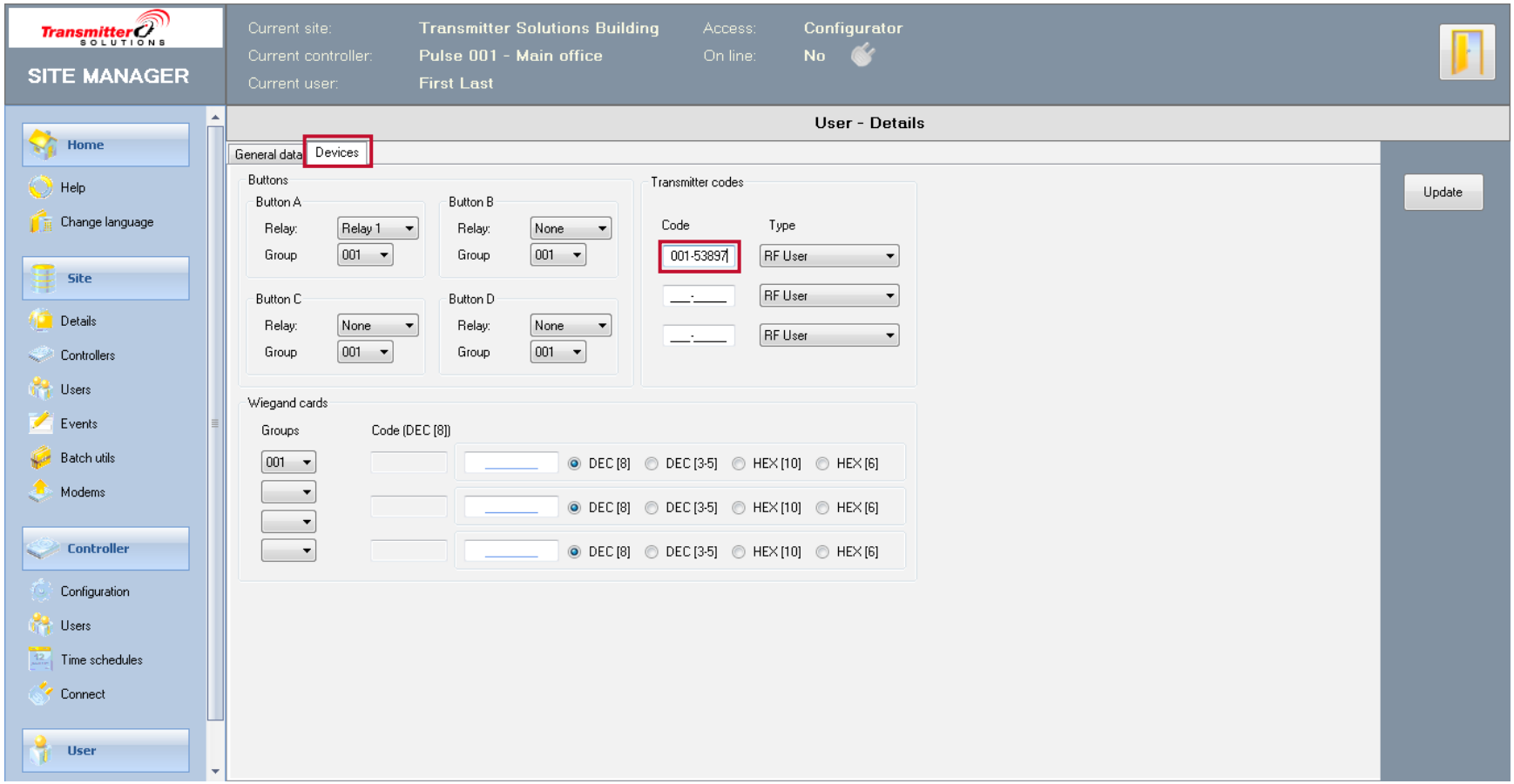


Under the user profile from step 8, access the devices tab at the top of the window. From here, we will add the transmitter code found in the previous step. We also set button A to trigger relay 1. Please remember from step 7 that we need to set the relay to RF before the Pulse will read the transmitters. Click update to continue.

**STEP 11:** Set the read format

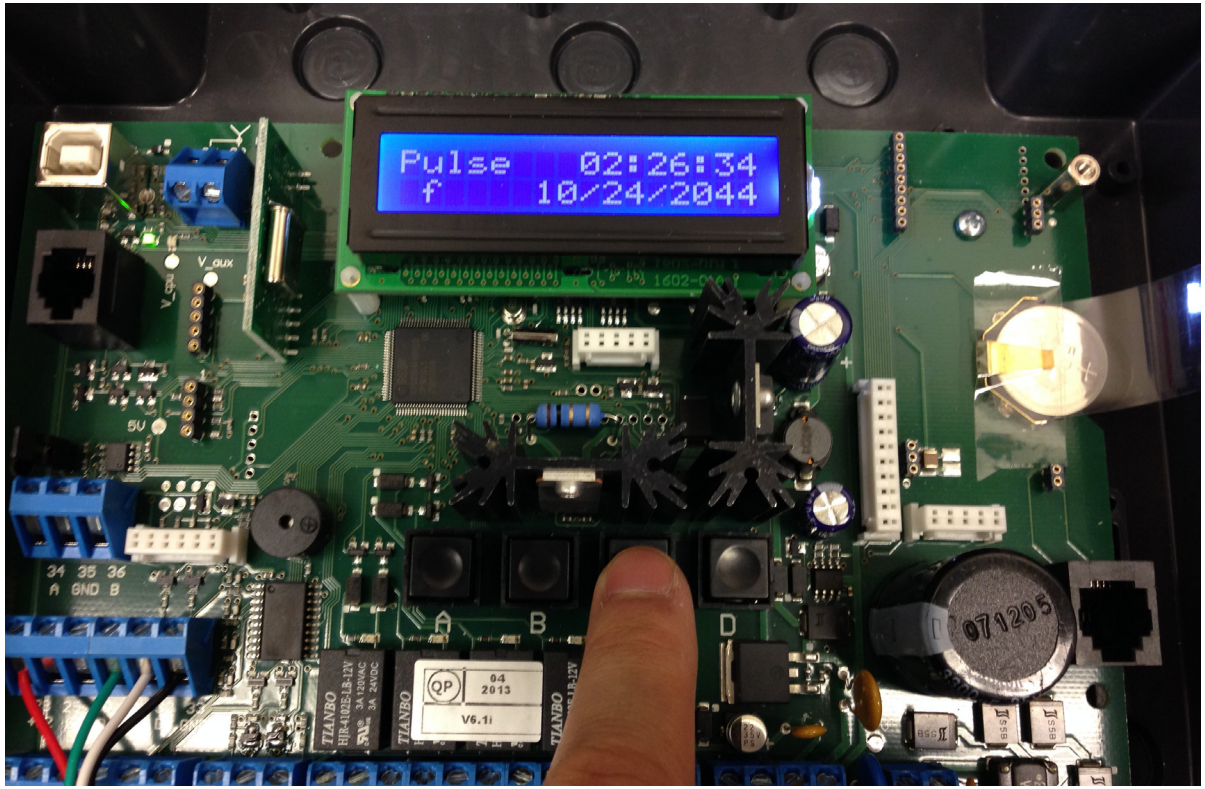


Press ‘C’ on the Pulse to switch between card and transmitter reading formats. The following chart shows which modes are available. In our example, we set the symbol to ‘f’ because we use the Wiegand [3-5] formatting on our cards. The same card may read different numbers depending on the symbol chosen. Any of the reading formats may be used to program in Site Manager.

| Symbol | RF TRANSMITTER | TAG WIEGAND |
|---|---|---|
| - | SN=10406 FC=001 | WG2 = 10750328 |
| h | SN=000128A6 | WG2 = 00A4096E |
| f | SN=001 10406 | WG2 = 164 02414 |
| d | SN=00075942 | WG2 = 10750318 |

**STEP 12:** Finding FC and SN for card

If you are programming a card/FOB, you may either use the DEC [8] code on the Pulse display or the FC and SN number (DEC [3-5]) located on the card. We will use the FC and SN number to program into our pulse. Please note that the top set of terminals for Wiegand is the Wiegand 1 location and the lower row of terminals is the Wiegand 2 location.

**STEP 13:** Program card into user profile

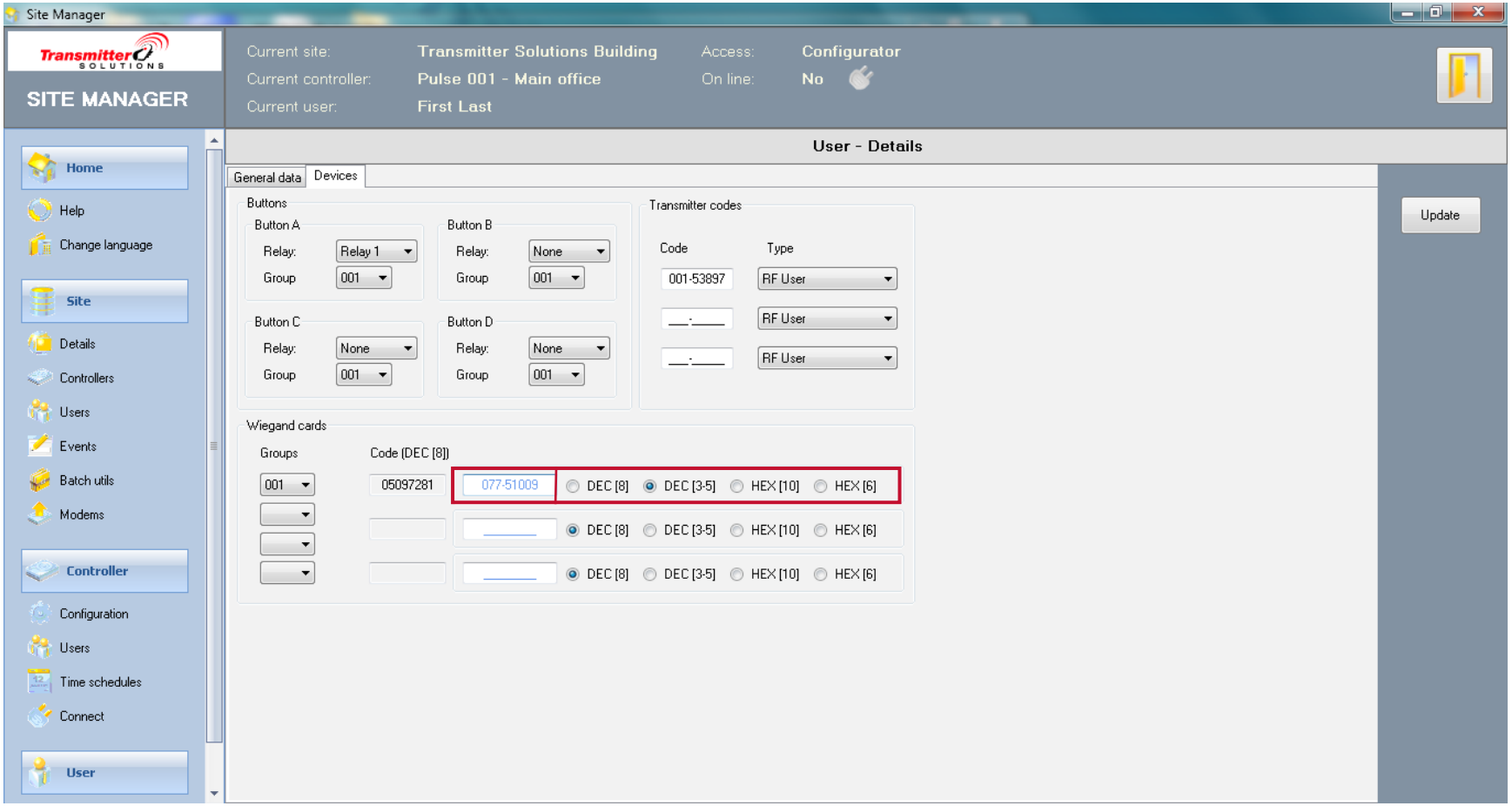


In the same user profile, we will assign the card from the previous step. Please note that DEC [3-5] is selected. This lets us enter the FC and SN from the card. Click update to continue.

## STEP 14: Batch adding

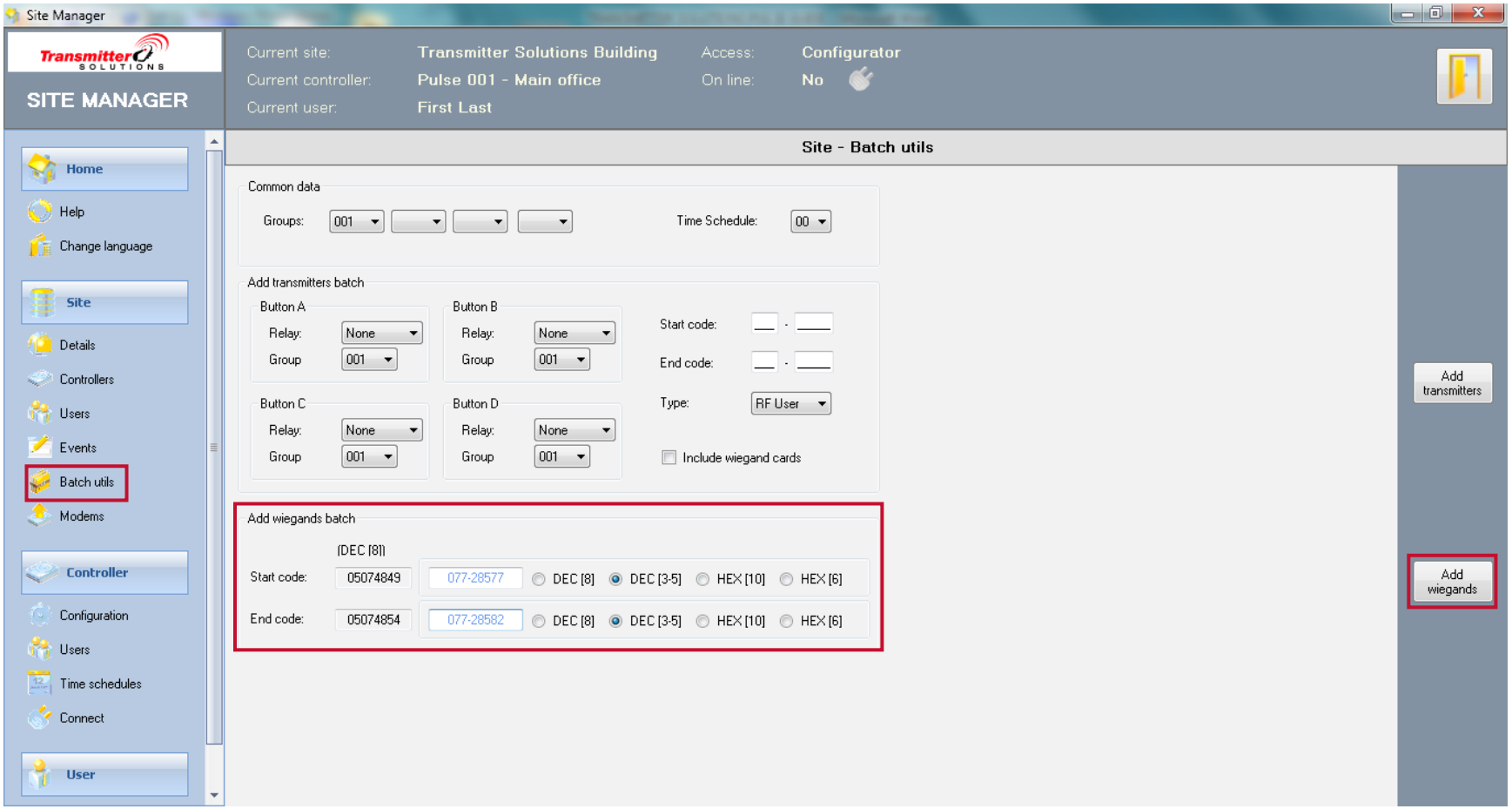


If there is a batch of transmitters or cards/FOBs to add, click on the “Batch Utils” tab on the left side of the screen. Entering the data is similar to programming individual cards and fobs from the previous steps. Each unit added will create a new user in the users tab for editing.

**STEP 15:** Connect to Pulse

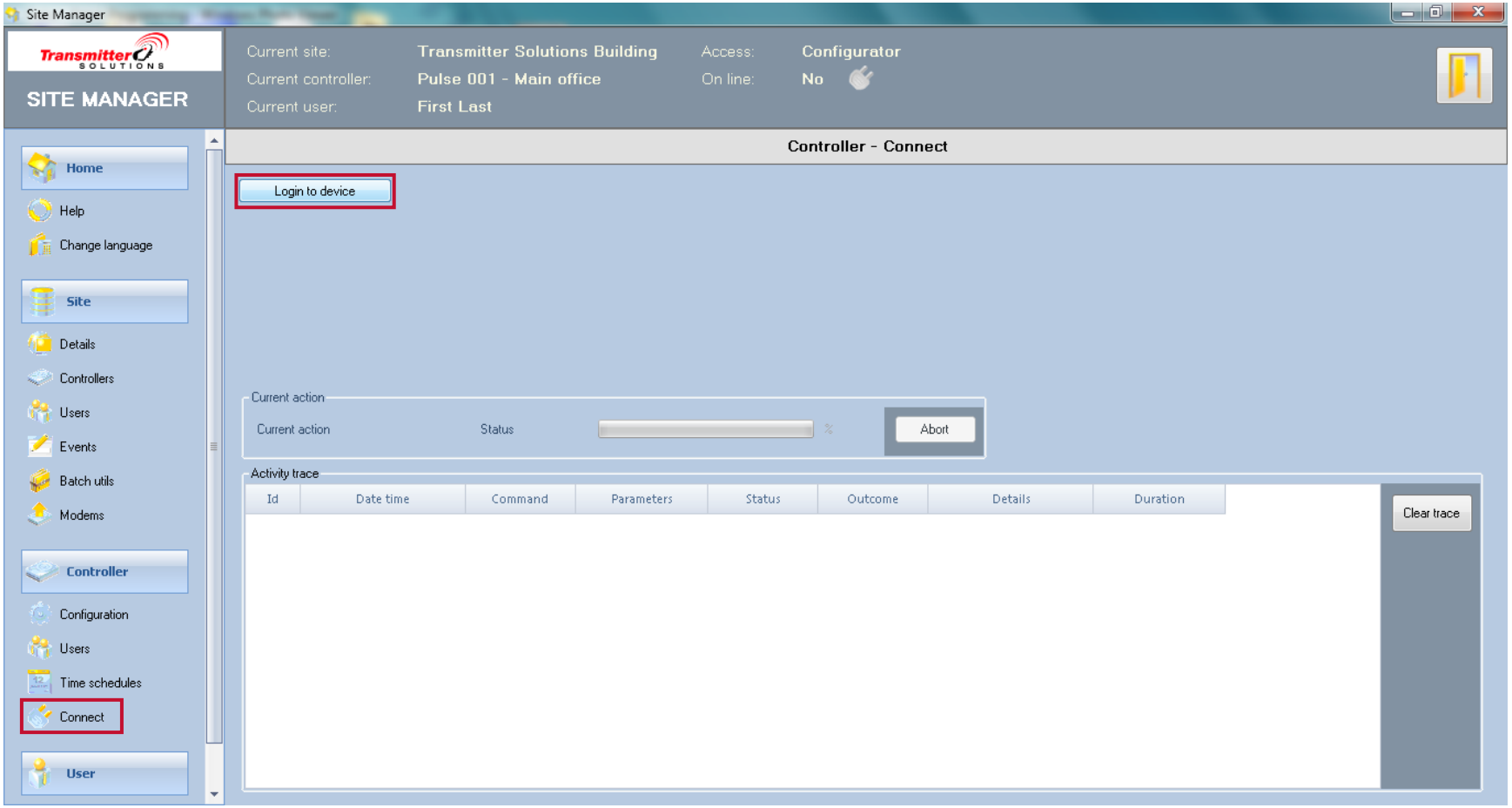


Next we will save all the data we have created from our PC to the Pulse. On the left side of the screen, click on “Connect” and click “Login to device”.

**STEP 16:** “Download Configuration, “Download Users”, “Set Time”

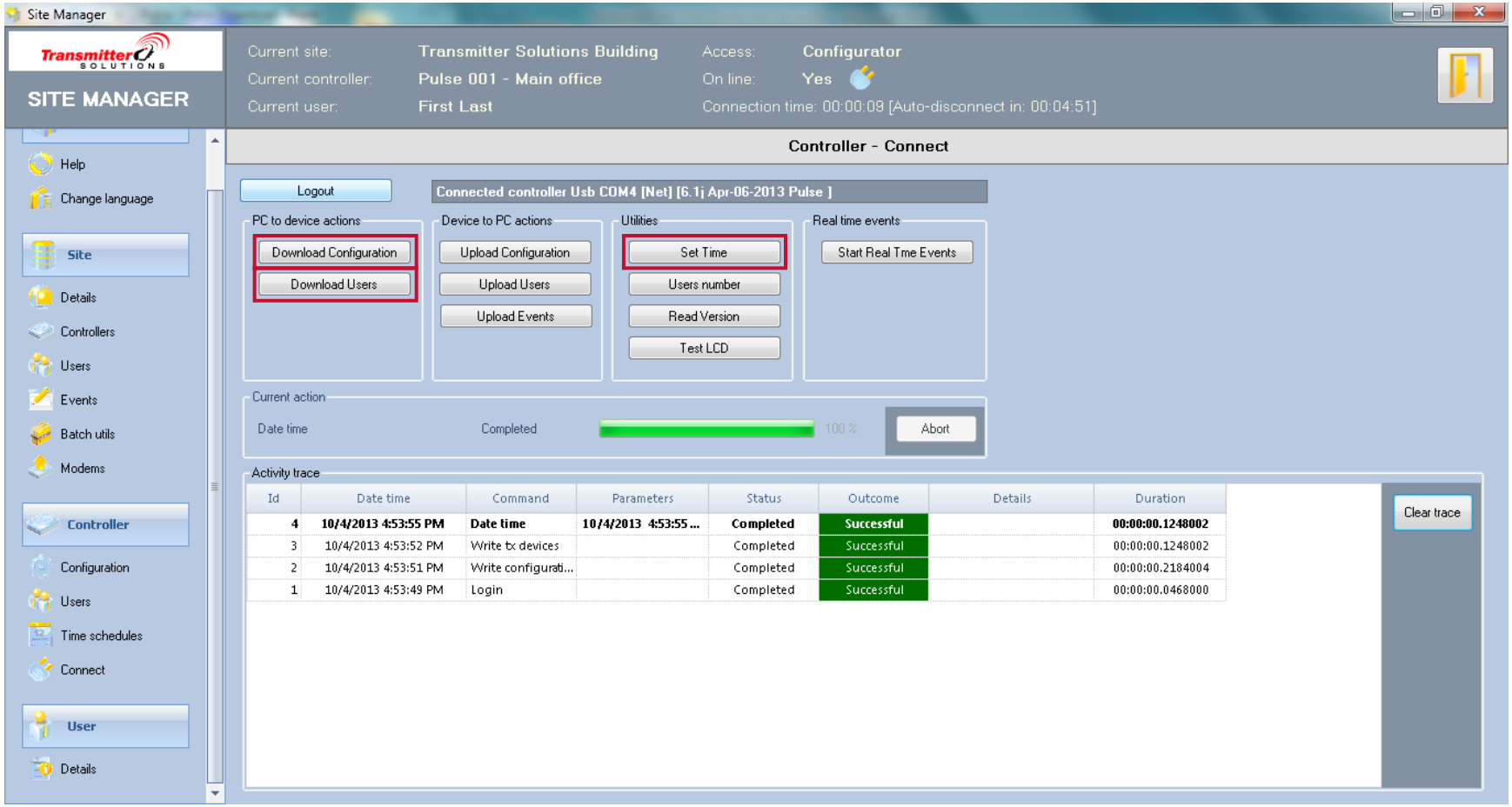


Next, click on “Download Configuration” and “Download Users” to load the data from your PC to your Pulse. Also click on “Set Time” to synchronize the Pulse to the time on your PC. Make sure to click on “Logout” before disconnecting your pulse.

**STEP 17:** Programming Complete

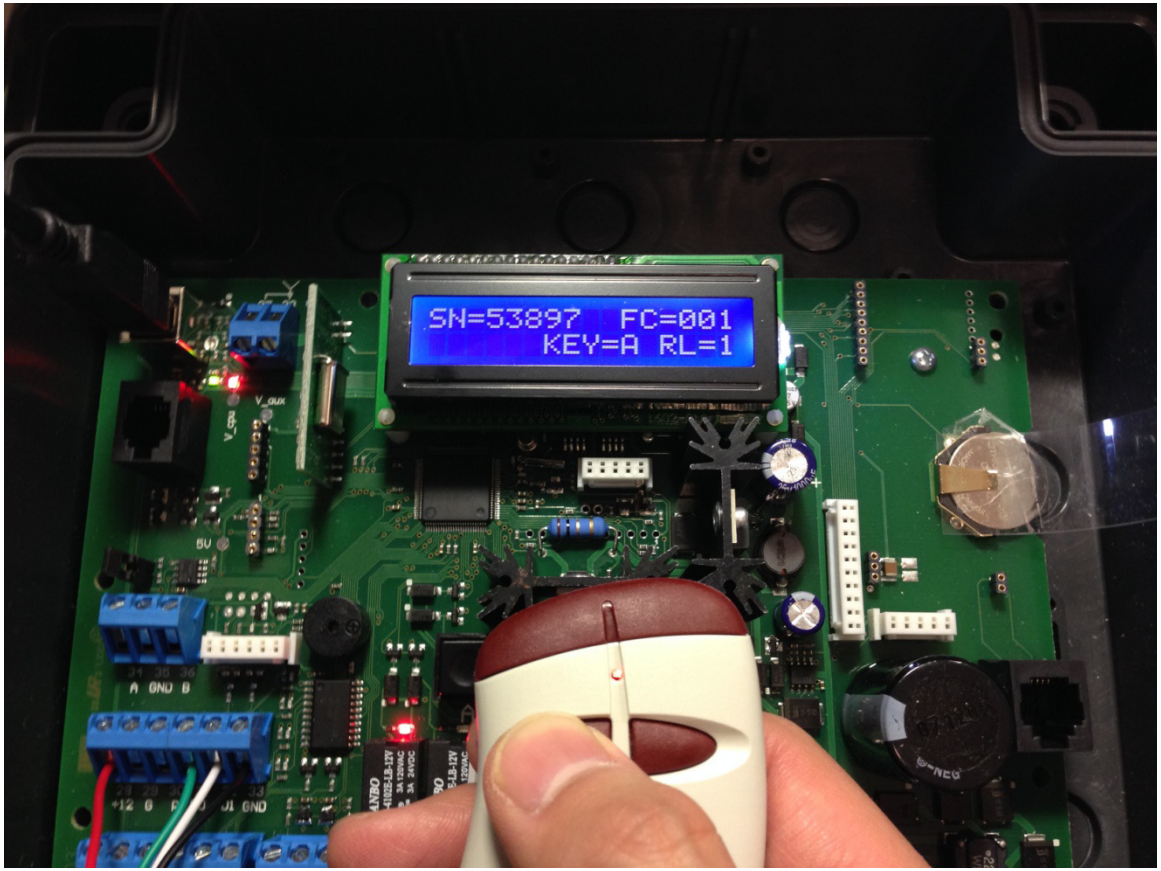


You may now use your Pulse.

**STEP 18:** Upload event history

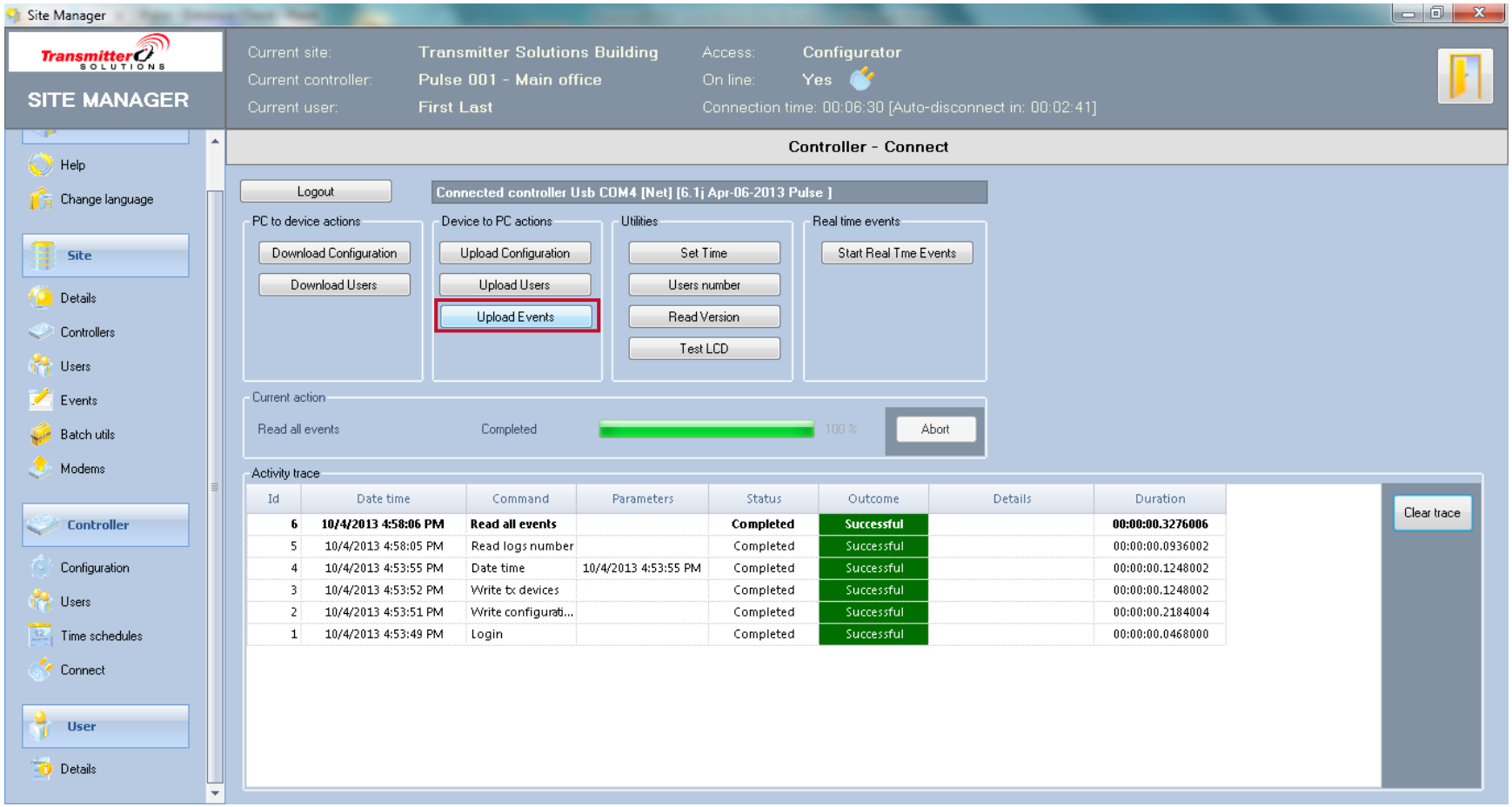


| Id | Date time | Command | Parameters | Status | Outcome | Details | Duration |
|---|---|---|---|---|---|---|---|
| 6 | 10/4/2013 4:58:06 PM | Read all events | | Completed | Successful | | 00:00:00.3276006 |
| 5 | 10/4/2013 4:58:05 PM | Read logs number | | Completed | Successful | | 00:00:00.0936002 |
| 4 | 10/4/2013 4:53:55 PM | Date time | 10/4/2013 4:53:55 PM | Completed | Successful | | 00:00:00.1248002 |
| 3 | 10/4/2013 4:53:52 PM | Write tx devices | | Completed | Successful | | 00:00:00.1248002 |
| 2 | 10/4/2013 4:53:51 PM | Write configurati... | | Completed | Successful | | 00:00:00.2184004 |
| 1 | 10/4/2013 4:53:49 PM | Login | | Completed | Successful | | 00:00:00.0468000 |

When you are ready to upload the events that have happened on the Pulse to the PC, reconnect it to the PC and click on “Connect” from the left side of the screen and “Login to device”. Next, click on “Upload Events”.

**STEP 19:** Merge data to computer database

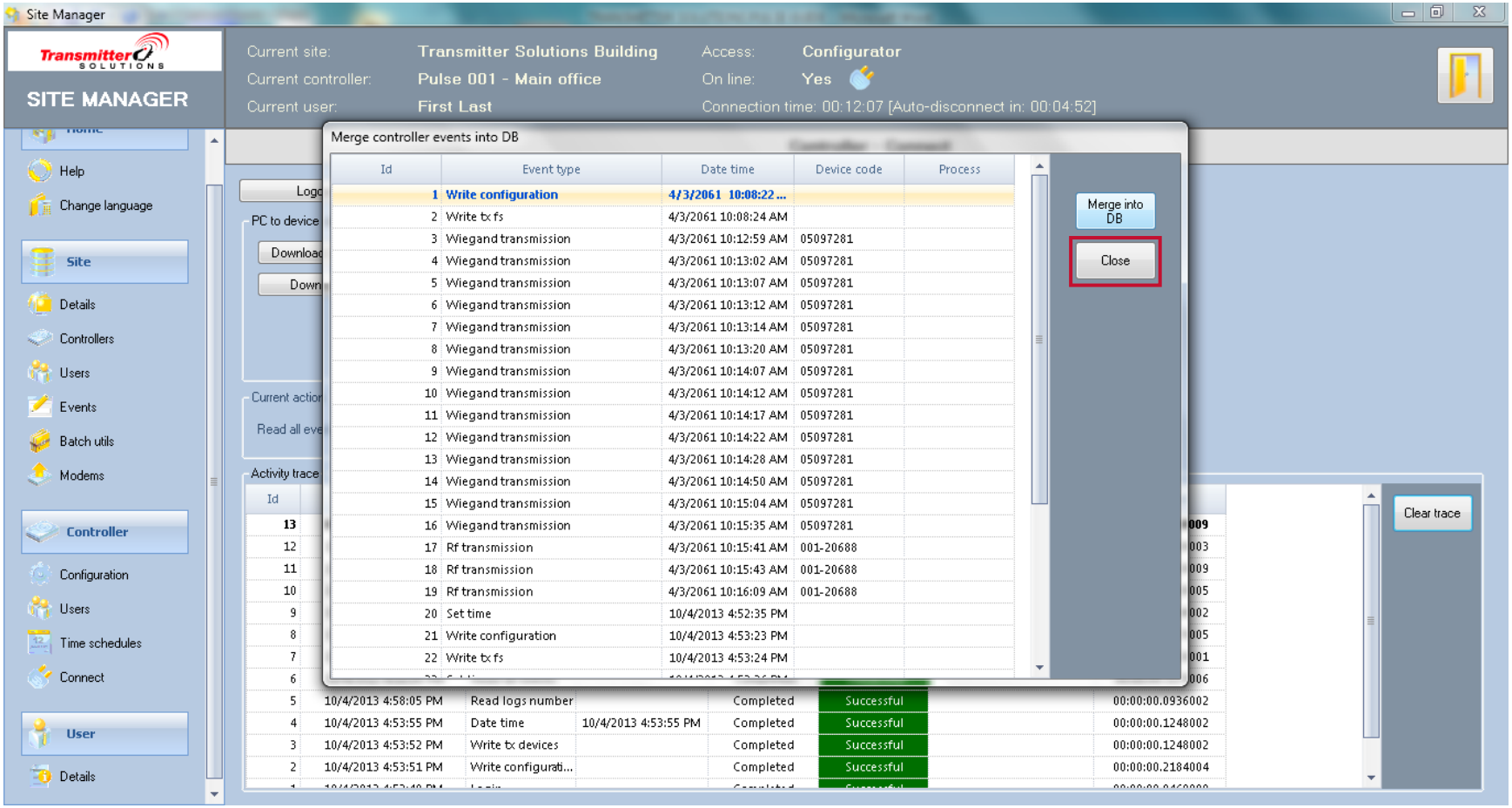


Click on merge to DB to merge the events to your computer's database on the "Events" tab on the left side of your screen.

# STAND ALONE GUIDE

## PUSH BUTTON AND LCD DISPLAY

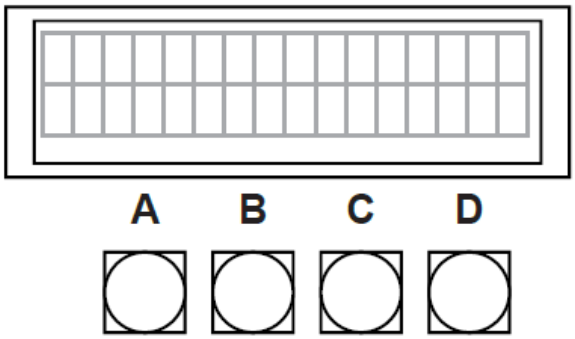


- A = Scroll menu
- B = Confirm
- C = Switch card/transmitter read display
  - Pushing C displays different symbols. The following chart

| Symbol | RF TRANSMITTER | TAG WIEGAND |
|---|---|---|
| - | SN=10406 FC=001 | WG2 = 10750328 |
| h | SN=000128A6 | WG2 = 00A4096E |
| f | SN=001 10406 | WG2 = 164 02414 |
| d | SN=00075942 | WG2 = 10750318 |

- D = Access menu / Cancel
  - A = Config Menu
    - The default password is 1111
    - The configuration password is used to access the installation, parameter setting, and maintenance options
  - B = Owner Menu
    - The default password is 1111
    - The owner password enables access to the event memory, time setting, and more.

## NOTES

- Internal clock
  - The internal clock is powered by a CR2032 lithium battery. The internal clock is maintained with the battery. Make sure that the positive side of the battery is upwards.
- Backup battery
  - Optional backup battery may be used with the proper cable
  - The battery cable is equipped with a fuse of T3.15A – 250V
- Factory reset
  - While the Pulse is powered off, hold B+D, and turn on the Pulse while holding these buttons. The Pulse will then start its factory reset.

## MENU

Pushing the button D of the board ( or even simultaneously the keys A+B of a Master transmitter memorized ) you can access to the main menu:

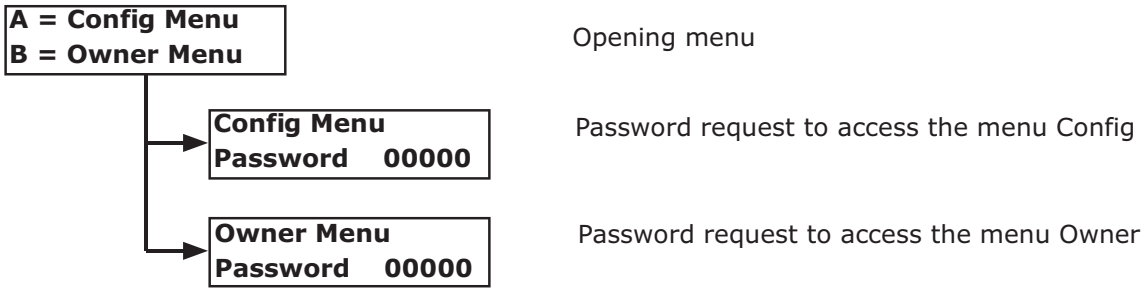


## CONFIG MENU

Selecting the option A of the opening menu you are requested to enter the password. Enter the password making use of the keys A and B of the board or of the transmitter Master. The key A increases the digits , the key B shifts the cursor left.

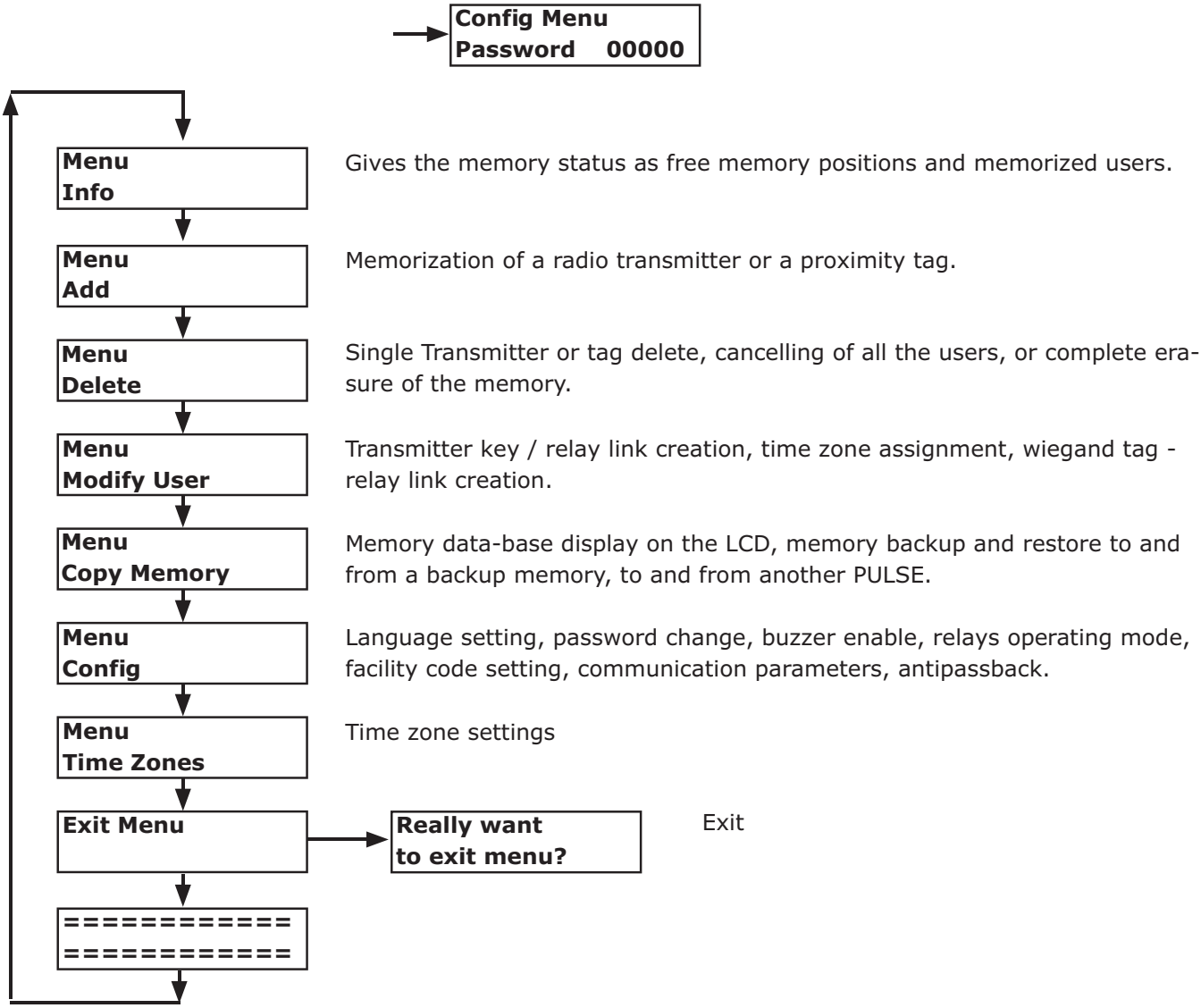

## MENU INFO

*Example:*

| |
|---|
| **Free Memory 3950** |
| **User Stored 0002** |

In this example are available 390 memory locations and have been memorized 2 users.

## MENU ADD

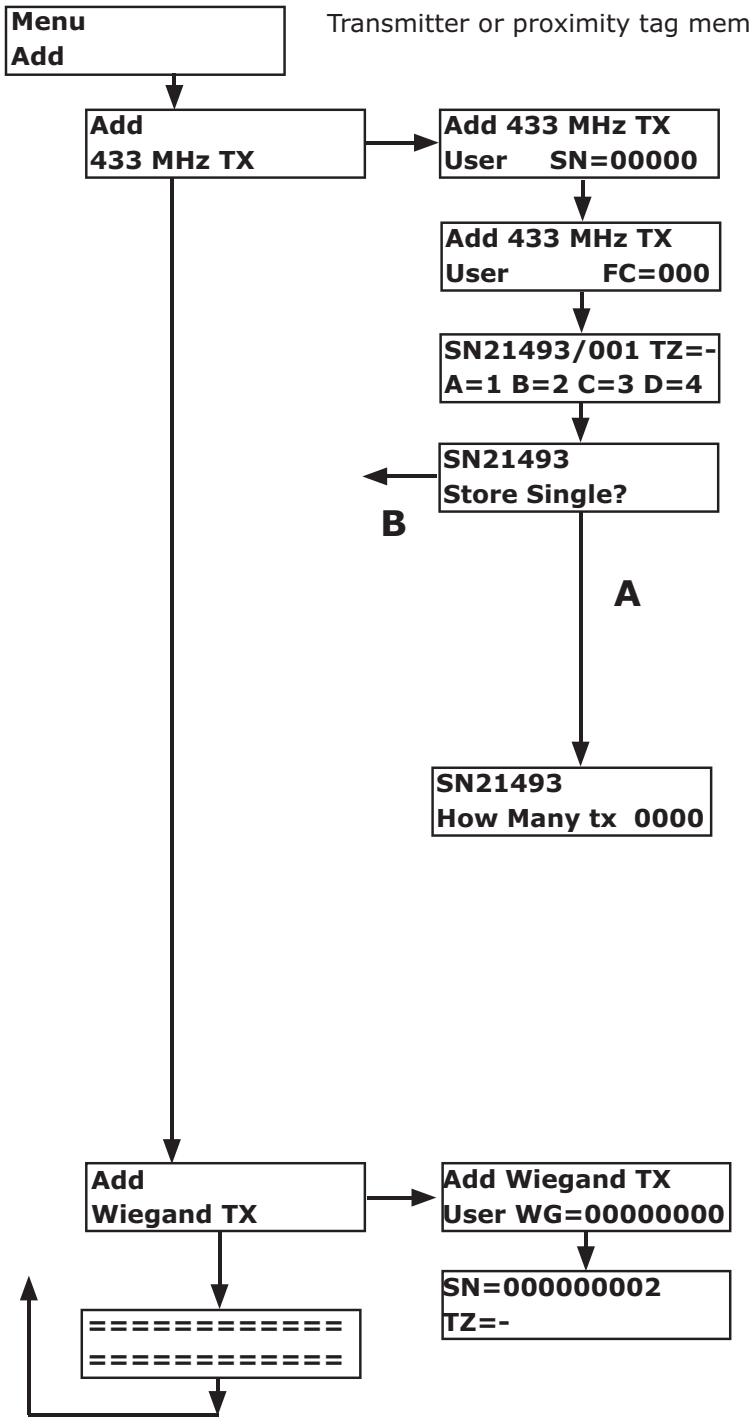


Transmitter or proximity tag memorization

**Memorization of a radio transmitter**
Type in the transmitter S/N making use of the buttons A and B of the board or activate the right key (B) of the transmitter : it's own S/N will be displayed automatically. Confirm with the button B or the key B of the transmitter. Then you are required to enter the Facility code. Type in the 3 digits and confirm.
Assign the time-zone desired ( 0..9) and select the relay associated to each transmitter key.
The Time zone «-», proposed as default, doesn't assign any time zone and gives permanent access.
By default is proposed to assign the relay K1 to key A, relay K2 to key B, relay K3 to key C and relay K4 to key D.
The symbol «-» doesn't assign any relay to the transmitter key.

**Multiple transmitter memorization**
Answering NO with the button A to the question «STORE SINGLE ?» you can proceed with multiple memorization. You are requested to enter the number of units to memorize.
At the end N transmitters are memorized, with starting S/N as the one typed.
Then you come back to the menu Add.

**Tag wiegand memorization**
Type in the serial number of the tag, making use of the buttons A and B or approach the tag to the reader : its own S/N is shown by the display. Then confirm with the button B.
On the next screen specify the Time-zone and confirm. Then you come back to the menu Add.

## MENU DELETE

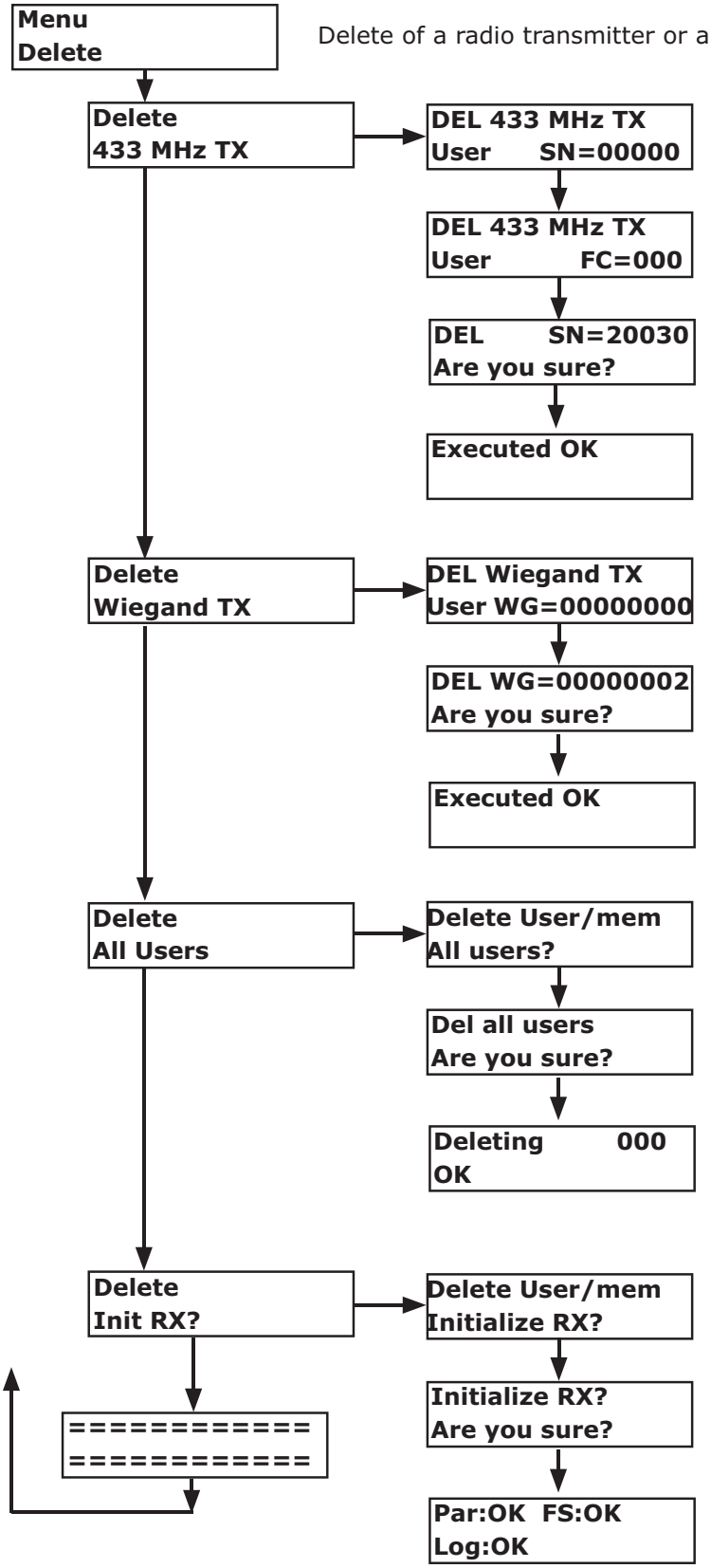


Delete of a radio transmitter or a proximity tag.

Specify even the Facility code and confirm.
At the end the program returns to menu Delete

**Delete a radio transmitter**
Type in the S/N of the transmitter to delete and press B.

**Delete a proximity tag.**
Type in the S/N of the tag to delete and press B.
At the end the program returns to menu Delete

**Delete all users.**
Delete all the transmitters and the tag memorized.
Confirm with the button B
At the end the program returns to menu Delete

**Memory initialization.**
Delete all the transmitters user and master and the tags.
Delete the event log file.
Delete the time zones.
Reset to the default value all the parameters ( except the user password).

## MENU MODIFY USER

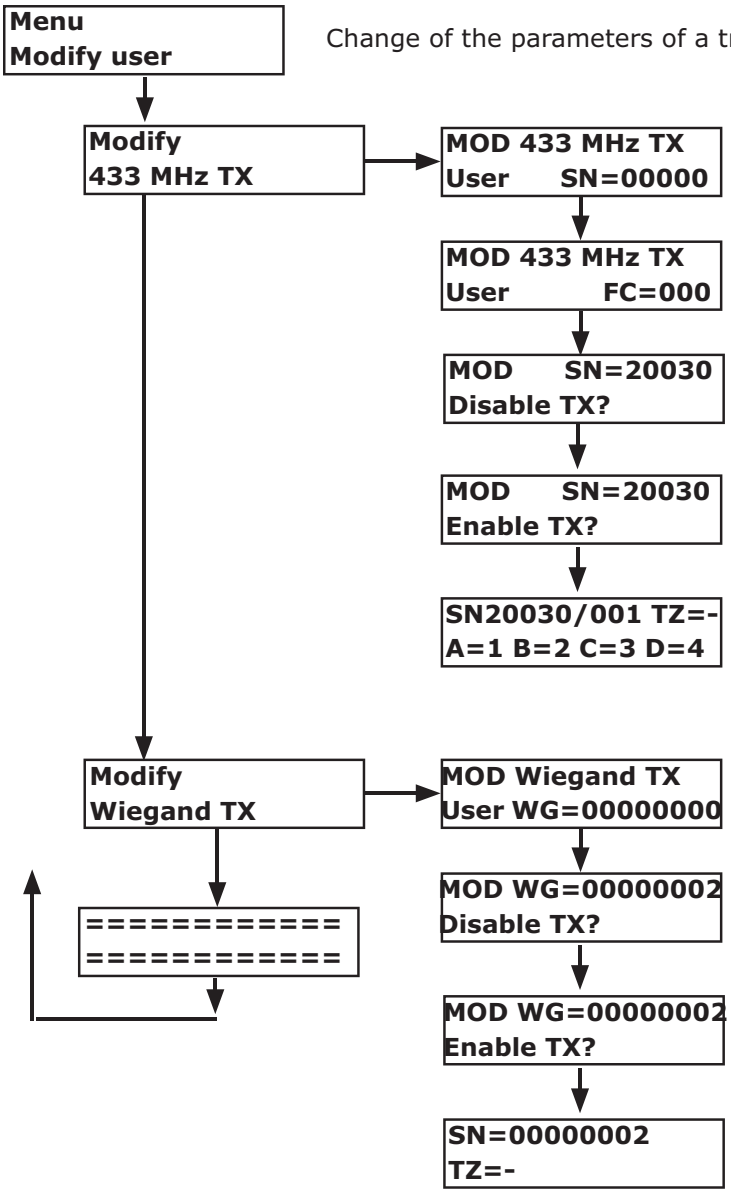


Change of the parameters of a transmitter or a proximity tag

**Change of a radio transmitter**
Insert the S/N to change or push the key B of the transmitter.
Type in even the facility code and confirm

By answering YES ( with the button B or the key B of the transmitter, the transmitter is disabled and the program skips to the next screen.
If the transmitter is disabled the program suggest to enable it and with a confirmation the operation is accomplished.
By answering NO the program suggests to change the relay settings or the time zone.

**Change of a proximity tag**
Insert the S/N to change and cofirm with the button B.
If the tag is enabled, the program suggest to disable it, if the tag is disabled, the program suggests to enable it.
The next screen invites to change the time zone.

## MENU COPY MEMORY (continued)

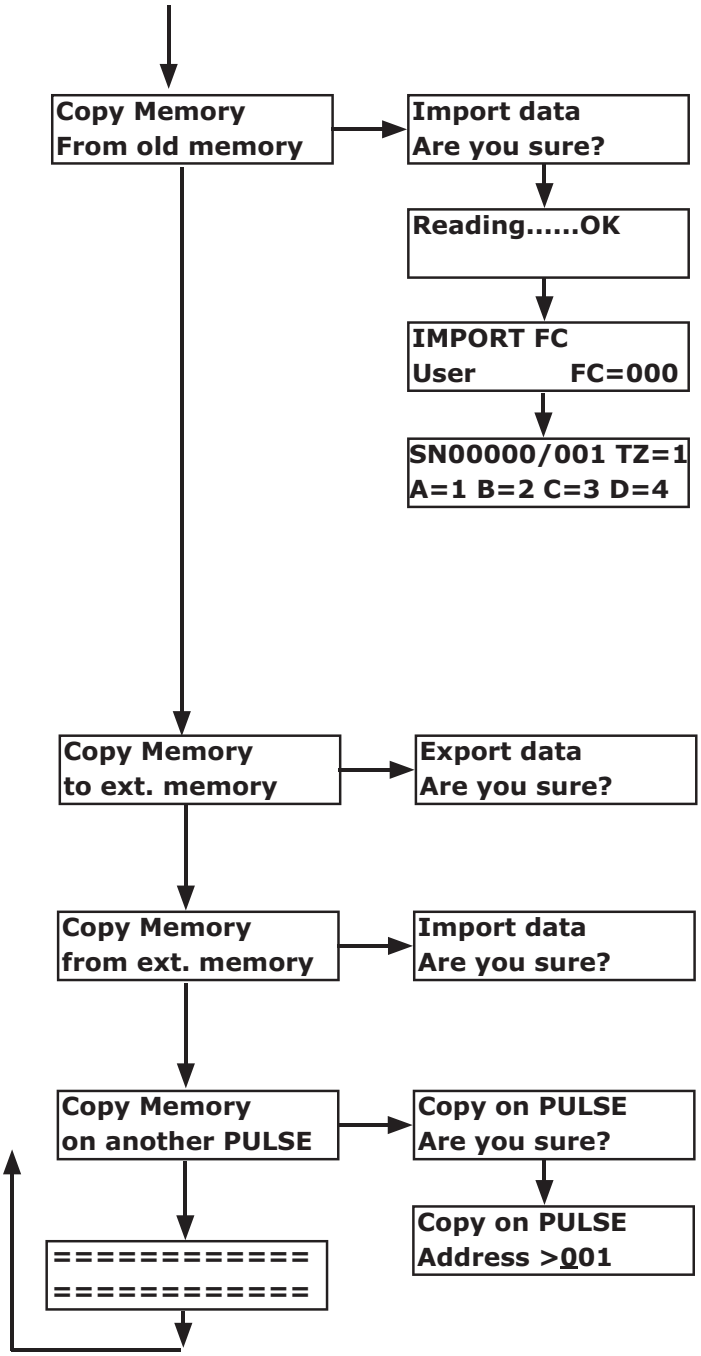


**Restore the memory data-base from an external memory into the internal memory**

With this option it is possible recover the data saved in a memory compatible with the Multiuser receivers of the Series K ( K5, K8, K8P, K16P).

The procedure replaces the internal data with the backup memory data.

Plug-in the backup memory on the connector as shown in fig. 1

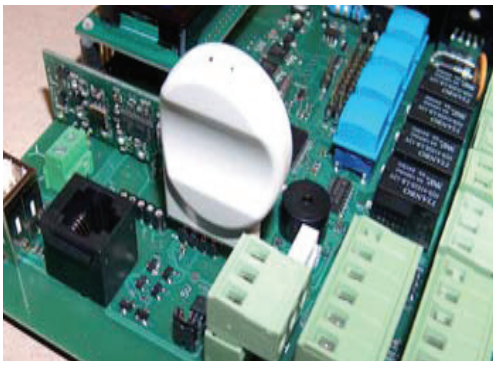

Fig. 1

**Backup or restore of the memory data-base on or from an external memory**

With this option it is possible to copy the memory content into an external memory or restore the data saved from an external backup memory into the internal memory.

**Copy the internal memory content to another PULSE, connected through RS-485**

With this option it is possible to copy the memory data-base to another PULSE connected in RS-485.

In this case it is necessary to insert the address of the target PULSE ( different from the PULSE source ).

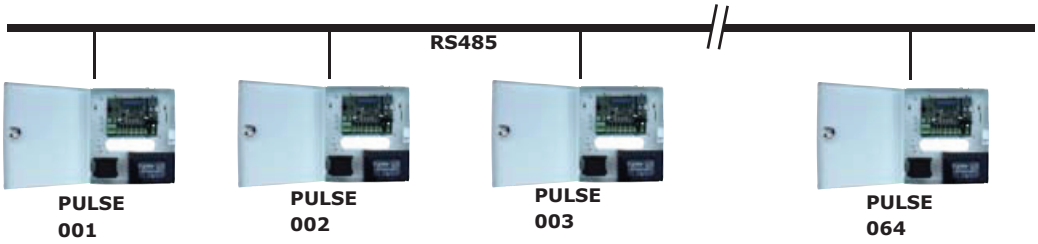

## MENU COPY MEMORY: COPY ON PRINTER

**Sends to print the memory content on the USB port**

With this option it is possible to send the memory content ( users or event log ) to the USB port and display them by using a communication software ( as. HyperTerminal ).
Proceed as follows:

1) Set the USB port of Pulse Receiver in mode PRINTER and select the communication speed [Baud-Rate] from 1200 to 115200 Baud ( See. Par. XXX).
2) Launch the HyperTerminal and set the serial communication parameters ( Name, Port, Speed in bit/sec, and so on ).

**3A) Print of the User memory.**

**Copy Memory On Display**
↓
**Copy Memory On Printer** → **Copy on Printer Are you sure?**
↓

In this case the following information are printed:

- Password
- Facility codes ( 2 types )
- Time zones ( week days, subzones )
- User N, Type, FC, SN, Status, Relay, TZ, User name.

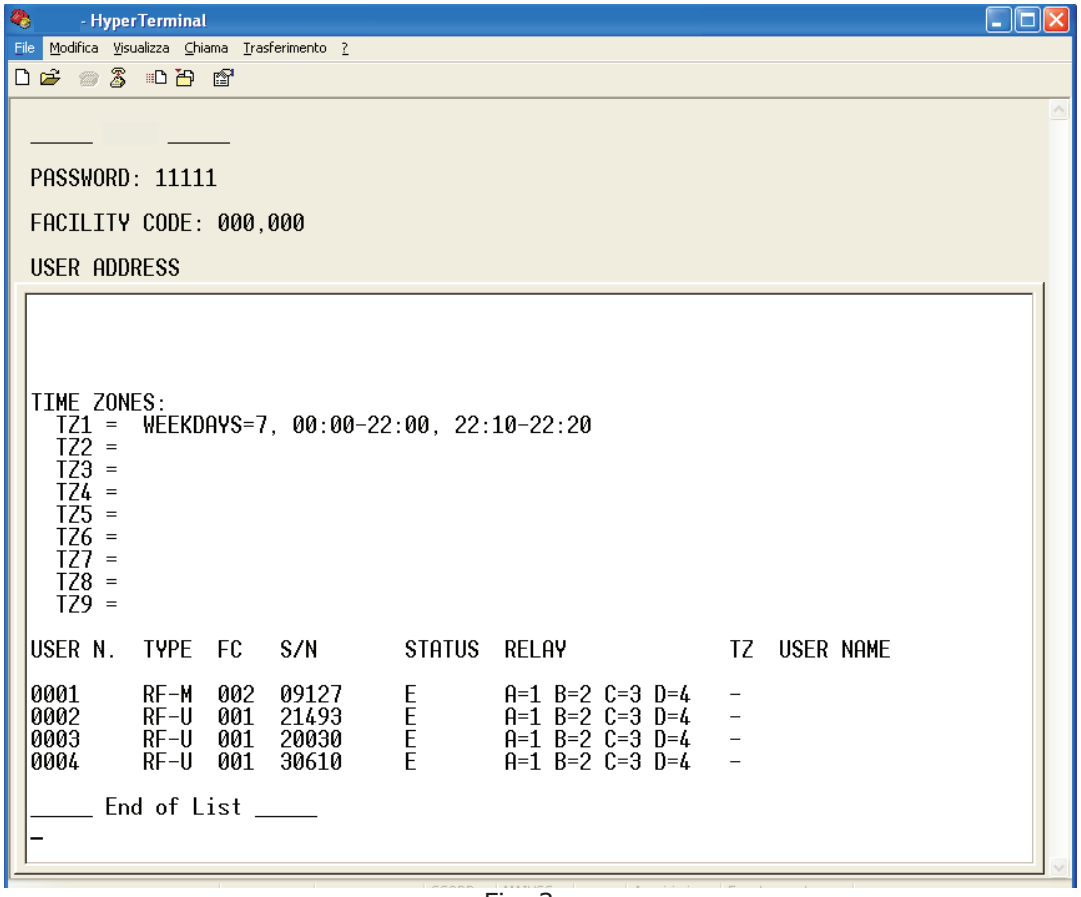


Fig. 3

### 3B) Print of the event log

The print of the event log can be done from the menu B (Owner )

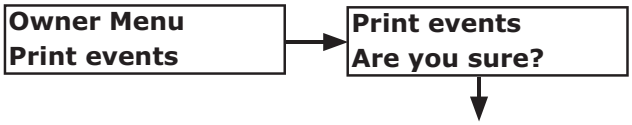


In this case are are sent to print all the events registered on the event memory of the receiver marked with date / time, type of the event.
Also in this case the complete log file is sent to the USB port using the communication parameters previously set in the menu COM.

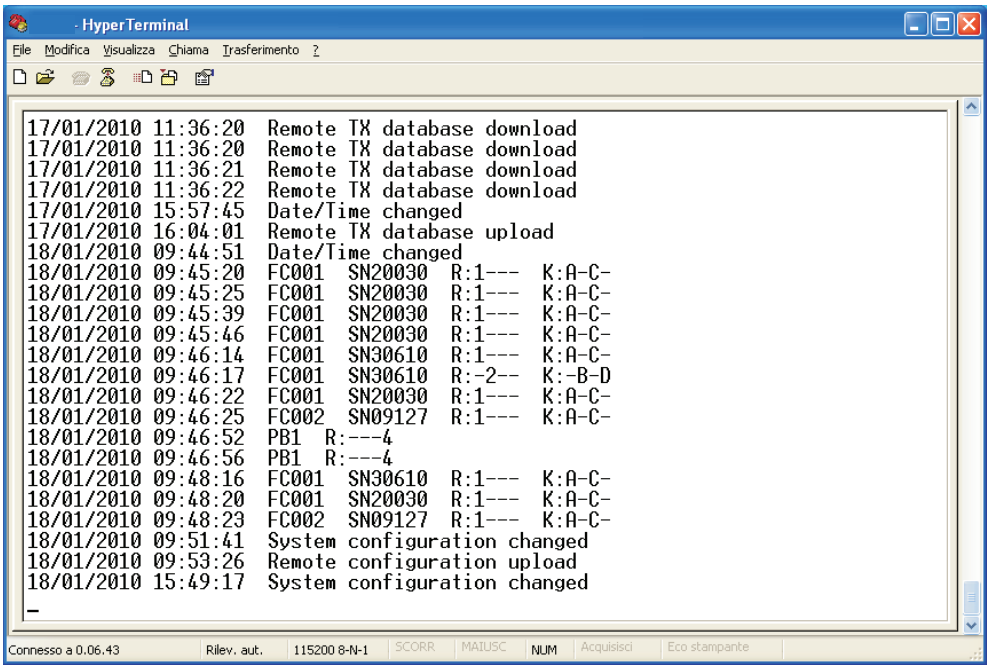


Fig. 4

## MENU CONFIG

**Menu Config**

**Config Change language** →

Set the language of the display among : **ENGLISH, ITALIANO, FRENCH, DUTCH, ESPANOL**

**Config Password Change** →

Change the entry password: for the modification it is necessary to type the current password

**Config Relay 1** →

Allows to set the relays ( K1 - K4) operating mode among : **PULSE, LATCH, TIMED**.

**Config Relay 2** →

**Config Relay 3** →

**Config Relay 4** →

Allows moreover to select the source which will activate the relay among:
**- RF** : radio transmitters;
**- W1** : proximity wiegand tag from the reader Wiegand 1;
**- RF + W1** : radio transmitters and tag from Wiegand 1;
**- W2** : proximity wiegand tag from the reader Wiegand 2;
**- RF + W2** : radio transmitters and tag from Wiegand 2;
**- W1 + W2** : proximity tags from the readers Wiegand 1 and Wiegand 2;
**- RF + W1 + W2** : radio transmitters and tags from Wiegand 1 and Wiegand 2;
**- DISAB** : relay disabled.

**Config Facility Code 1** →

**Config Facility Code 2** →

Set the **FACILITY CODE** filter.
Only the radio transmitters and the tag with the Facility Code identical to the one selected will be accepted.
It is possible to set up to 2 different Facility codes.
Radio transmitters or tags having Facility code different from the one chosen will be considered not valid.

**Config COM Parameters** →

Set the communication parameters : see par. 13.9

**Config Anti Pass Back** →

Set the mode of the Anti Pass back function, which operates <u>only</u> on the detection of the wiegand tags. The choices available are :
**- DISAB** : Function disabled
**- In = W1 / OUT = W2** : In this case is set an **Antipassback** for the user who activates any relay through the reader Wiegand 1.
The tag, once read by reader Wiegand 1 cannot be accepted anymore by Wiegand 1 but <u>only</u> by Wiegand 2.

**- In = W2 / OUT = W1** : In this case is set an **Antipassback** for the user who activates any relay through the reader Wiegand 2.
The tag, once read by reader Wiegand 2 cannot be accepted anymore by Wiegand 2 but <u>only</u> by Wiegand 1.

**==========**
**==========**

## MENU CONFIG: COM PARAMETERS

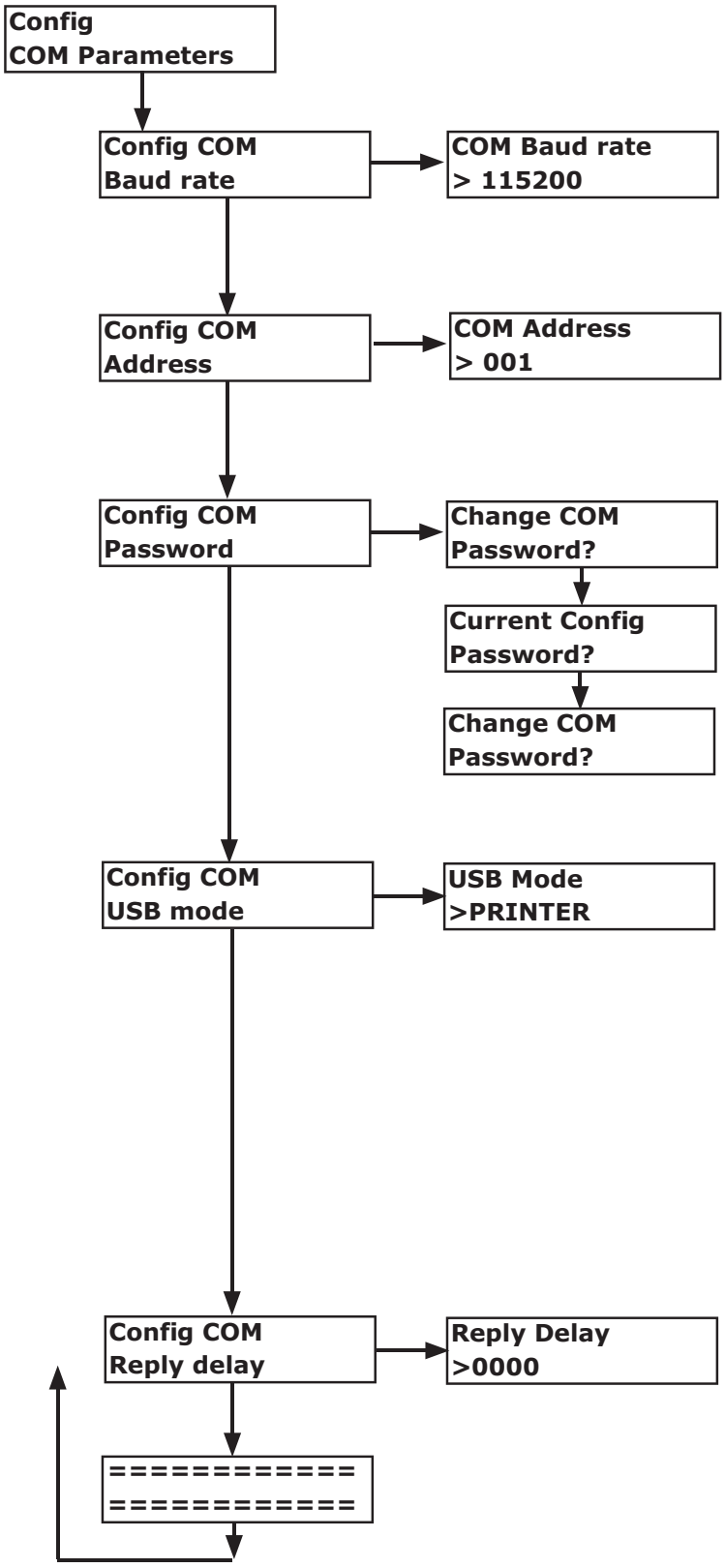


Set the serial communication speed ( baud rate ) for the RS-485.
The baud rate can be chosen among : **1200, 2400, 9600, 19200, 38400, 57600, 115200.**
*The default value is 38400 BAUD.*

Set the address of each Pulse Receiver unit on the RS-485 Can be set up to 64 different addresses. The default address is 001. The address 000 is not allowed. Addresses higher of 200 are not accepted.

Set the serial communication password.
For its modification it is necessary to insert the current one.
The default password is 11111.

Set the operating mode of the USB port
**- NET**: The port USB is used for the serial communication between PC and Pulse Receiver.
Pulse Receiver can act as gateway for the connection between the PC and another Pulse Receiver connected through the RS-485
**- PRINTER**: Allow to download the memory contents ( users or event log ) through the USB to a PC screen.
**- MODEM:** Pulse Receiver becomes transparent and allows the PC to communicate directly with the Modem (GSM o PSTN) inserted on the mother board.
**- DISAB:** The USB door is disabled.

Pulse Receiver inserts a default delay of 50 mS on the reply times of Pulse Receiver along the RS-485 to balance the physical transmission propagation times. It is possible to change this time inserting the proper value ( expressed in mS ).

## TIME ZONES

The device allows to manage the permission time zones. 9+1 time zone are available and for each of them are available 9 interval times.
The time zone to which belongs each S/N ( radio transmitter or tag wiegand ) is specified during the first memorization of the user. The time zone marked as «-» corresponds to the permanent right to enter and doesn't assign any time zone to the selected S/N. The Time zone «-» is the default value.

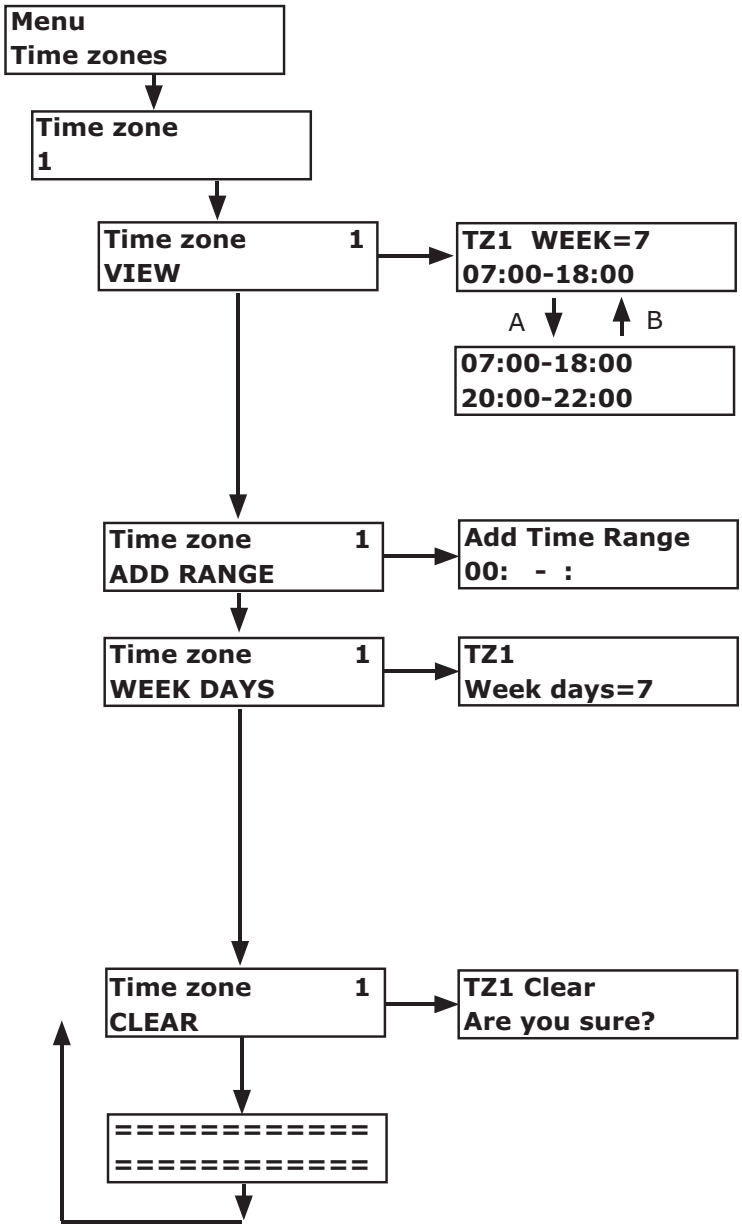


The option **VIEW** allows to display the settings of the corresponding time zone , either the parameter «week days( 5 or 7 )» or all the assigned time intervals ( up to 9 ).
Scroll down with the button A and up with the button B.

The option **ADD RANGE** adds a interval time to the selected time zone.

The option **WEEK DAYS** sets the number of validity days of the selected time zone.
The value **5** extends the validity of the interval times set with the option RANGE to 5 days a week ( from Monday to Friday).
The value **7** extends the validity of the interval times set with the option RANGE to all the days of the week (from Monday to Sunday).

The option **CLEAR** deletes all the settings corresponding to the selected time zone.

## OWNER MENU

The menu OWNER can be accessed with a password different from the menu CONFIG.
The Owner, in this way, can have a different authorization level and execute the following operations :

- Print to USB the event log file
- Adjustment of the internal clock [date / time ]
- Change of the personal entry password.

The default entry password for for this menu is 11111.
You can access to the Owner menu pushing the button D of the main board or pushing simultaneously the keys A+B of a Master transmitter.

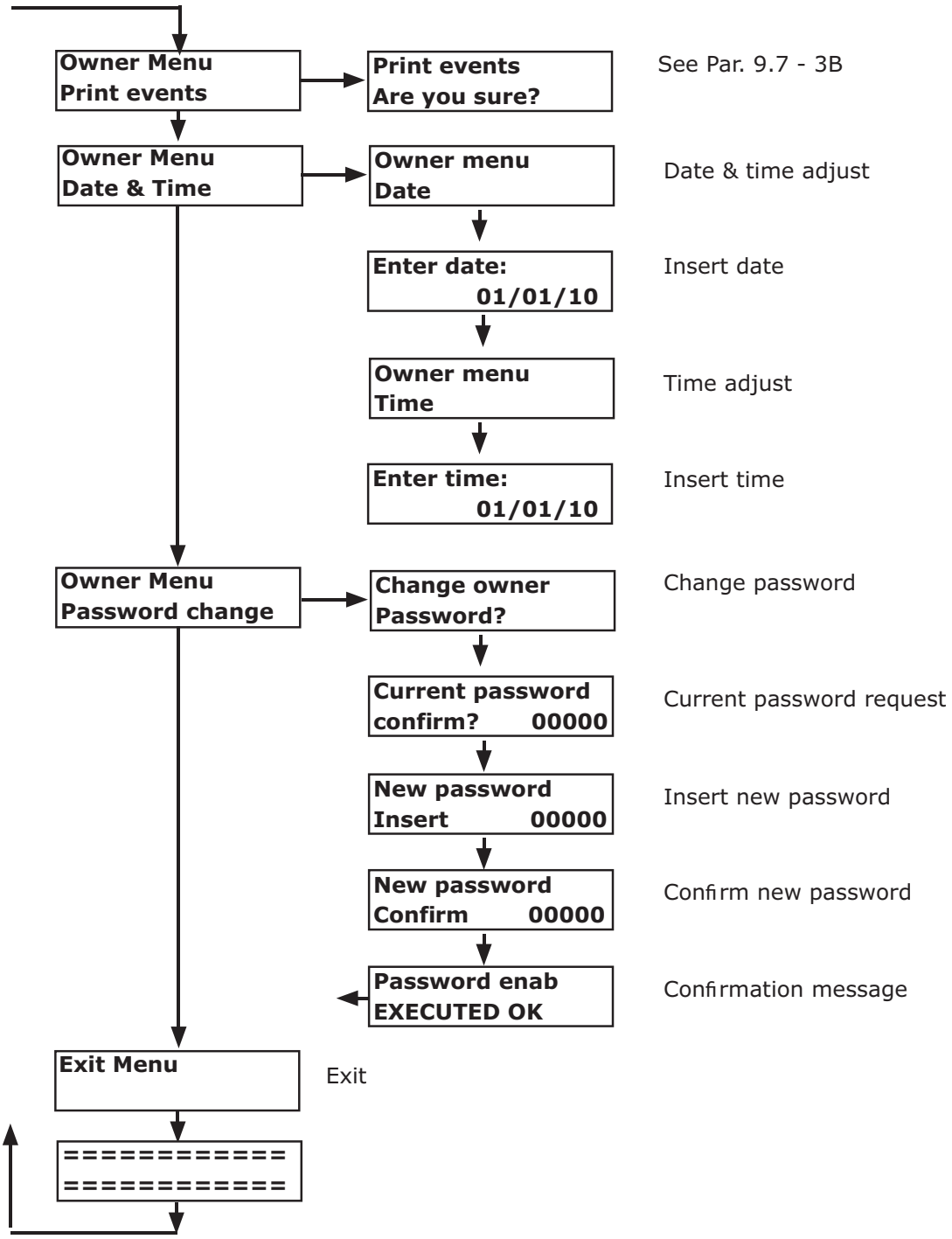

## WARRANTY

The warranty period of Transmitter Solutions® Pulse Receiver is 24 months. This warranty shall begin on the date the transmitter is manufactured. During the warranty period, the product will be repaired or replaced (at the sole discretion of Transmitter Solutions®) if the product does not operate correctly due to a defective component. This warranty does not extend to (a) the product case, which can be damaged by conditions outside the control of Transmitter Solutions®, or (b) battery life of the product. This warranty is further limited by the following disclaimer of warranty and liability:

EXCEPT AS SET FORTH ABOVE, TRANSMITTER SOLUTIONS® MAKES NO WARRANTIES REGARDING THE GOODS, EXPRESS OR IMPLIED, INCLUDING WARRANTY OF MERCHANTABILITY OR WARRANTY OF FITNESS FOR A PARTICULAR PURPOSE. BUYER MAKES NO RELIANCE ON ANY REPRESENTATION OF TRANSMITTER SOLUTIONS®, EXPRESS OR IMPLIED, WITH REGARD TO THE GOODS AND ACCEPTS THEM "AS-IS/WHERE-IS". TRANSMITTER SOLUTIONS® SELLS THE GOODS TO BUYER ON CONDITION THAT TRANSMITTER SOLUTIONS® WILL HAVE NO LIABILITY OF ANY KIND AS A RESULT OF THE SALE. BUYER AGREES THAT TRANSMITTER SOLUTIONS® SHALL HAVE NO LIABILITY FOR DAMAGES OF ANY KIND, WHETHER DIRECT, INCIDENTAL OR CONSEQUENTIAL DAMAGES, INCLUDING INJURIES TO PERSONS OR PROPERTY, TO BUYER, ITS EMPLOYEES OR AGENTS, AS A RESULT OF THE SALE. BUYER ALSO AGREES TO HOLD TRANSMITTER SOLUTIONS® HARMLESS FROM ANY CLAIMS BUYER, OR ANY THIRD PARTY, MAY HAVE AS A RESULT OF BUYER'S USE OR DISPOSAL OF THE GOODS. BUYER HAS READ THIS DISCLAIMER AND AGREES WITH ITS TERMS IN CONSIDERATION OF RECEIVING THE GOODS.

Transmitter SOLUTIONS®

7380 S. Eastern Ave, Suite 124-320 • Las Vegas, NV 89123

(866) 975-0101 • (866) 975-0404 fax

www.transmittersolutions.com