BYAN 20x16 PRE-WIRED BACKBOARD WITH ACCESSORIES

In this example, all accessories are wired as NORMALLY CLOSED on a BYAN SYSTEMS 3-base pre-wired backplate. Only one accessory can be connected through Terminals #24+ and #18 on the pre-wired backplate. The second accessory will be connected to Terminals #18 and #19. (Either accessory can be wired as Car Safe OR as People Safe.)

Photobeam Connection:

Disconnected the jumpered connection of the GREEN wire from the Shadow Base and the Safety Base from Pin 5 of the Shadow Base. Wire nut the WHITE wire of the photobeam to the GREEN wire at the Safety Base. Connect the common wire of the photobeam (YELLOW) to Pin 5 of the Shadow Base. Connect the RED wire of the photobeam to Terminal #24+. Connect the BLACK wire of the photobeam to Terminal #18 (see diagram below).

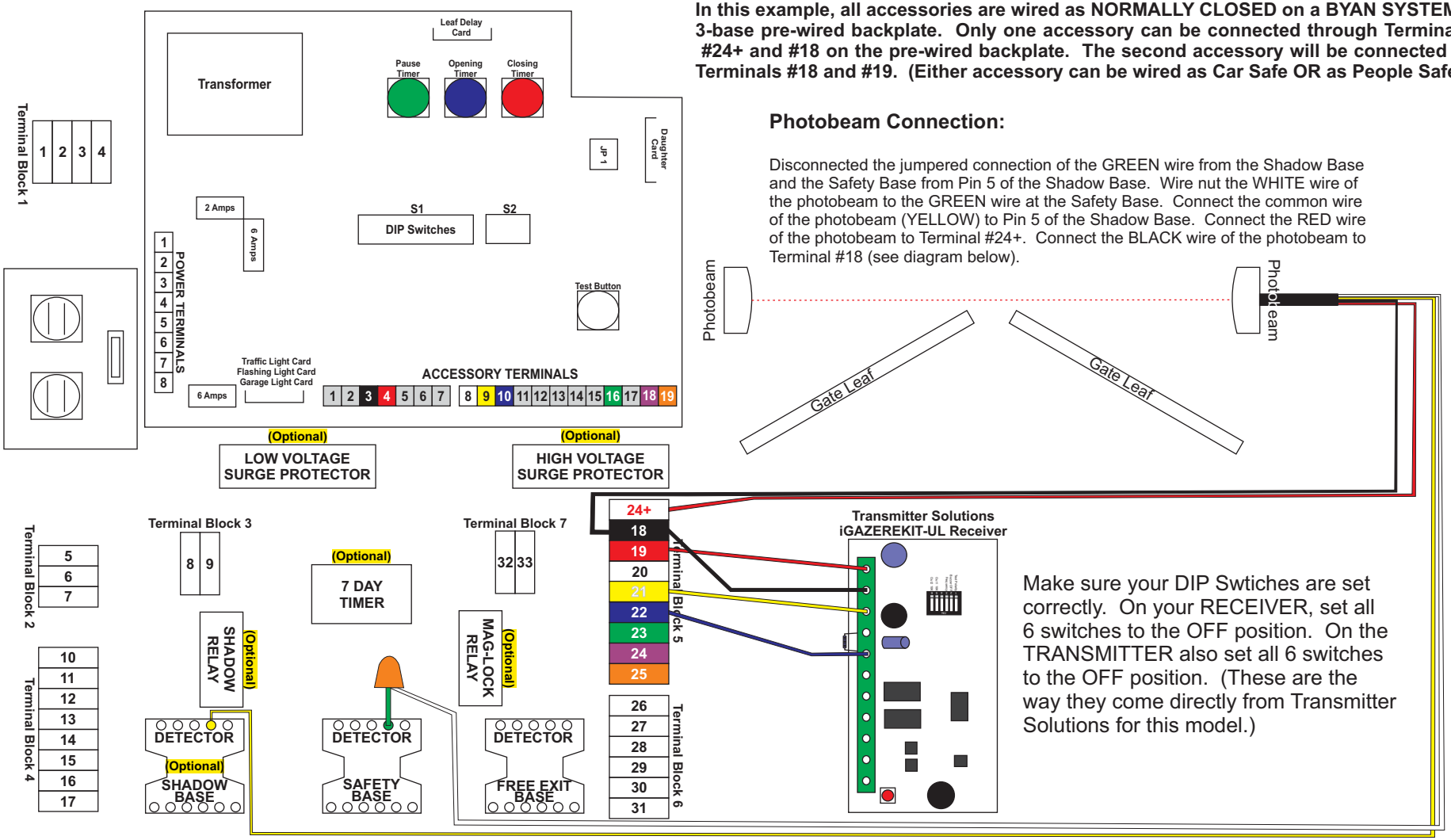

Make sure your DIP Swtiches are set correctly. On your RECEIVER, set all 6 switches to the OFF position. On the TRANSMITTER also set all 6 switches to the OFF position. (These are the way they come directly from Transmitter Solutions for this model.)

TB1 COMMERCIAL POWER TERMINALS

1	220-VOLT AC HOT	(RED)
2	115-VOLT AC HOT	(BLACK)
3	115-VOLT AC NEUTRAL	(WHITE)
4	GROUND	(GREEN)

TB2 OPERATOR MOTOR TERMINALS

5	UN-INTERRUPTIBLE 115-VOLT AC	(BLACK)
6	UN-INTERRUPTIBLE 115-VOLT AC	(WHITE)
7	GROUND	(GREEN)

3 INTERRUPTED VOLTAGE TERMINALS

8	INTERRUPTED HIGH VOLTAGE 115 -VOLT AC	(BLACK)
9	INTERRUPTED HIGH VOLTAGE 115 -VOLT AC	(WHITE)

TB4 OPERATOR MOTOR TERMINALS

10	GROUND	(GREEN)
11	MOTOR 1 DIRECTIONAL	(BLACK)
12	MOTOR 1 DIRECTIONAL	(RED)
13	MOTOR 1 COMMON	(WHITE)
14	GROUND	(GREEN)
15	MOTOR 2 DIRECTIONAL	(BLACK)
16	MOTOR 2 DIRECTIONAL	(RED)
17	MOTOR 2 COMMON	(WHITE)

TB5 ACCESSORY TERMINALS

24+	MONITORED SAFETY	(RED)
18	24-VOLT AC COMMON	(BLACK)
19	24-VOLT AC POSITIVE	(RED)
20	PEOPLE SAFE (NORMALLY CLOSED)	(WHITE)
21	COMMON SAFETY	(YELLOW)
22	CAR SAFE	(BLUE)
23	COMMON OPEN/REVERSING	(GREEN)
24	COMMAND OPEN (NORMALLY OPEN)	(PURPLE)
25	COMMAND REVERSING (NORMALLY OPEN)	(ORANGE)

TB6 LOOP TERMINALS

26	FREE EXIT LOOP	(GRAY)
27	FREE EXIT LOOP	(BROWN)
28	SAFETY LOOP	(GRAY)
29	SAFETY LOOP	(BROWN)
30	SHADOW LOOP	(GRAY)
31	SHADOW LOOP	(BROWN)

TB7 MAG-LOCK TERMINALS

32	MAG-LOCK	(BROWN)
33	MAG-LOCK	(BROWN)

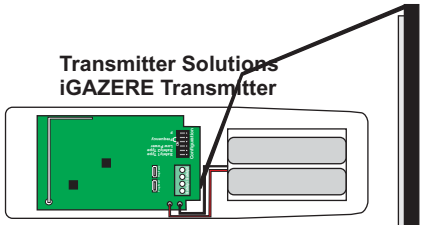

Sensing Edge Connection:

Connect the power from the RECEIVER of the sensing edge by connecting the BLACK wire to the second terminal on the receiver and connecting the other end to Terminal #18 of the pre-wired backplate. Next connect the RED wire to the first terminal of the receiver and connect the other end to Terminal #19 of the pre-wired backplate. Connect the common wire of the receiver (YELLOW) to the thir terminal of the receiver, connecting the other end to Terminal #21 of the pre-wired backplate. Lastly, connect the Normally Closed wire (BLUE) to the fifth terminal of the receiver to Terminal #20 (People Safe) on the pre-wired backplate (see diagram to the left).